2008 PRICE LIST

SCOTT HEALTH & SAFETY

Prices are subject to change without notice.

AIR SUPPLIED RESPIRATORS

Firefighting Self-Contained Breathing Apparatus
Air-Pak® 75™ & Air-Pak® NxG7™ SCBA Configurator 3

Non-Fire SCBA's
Air-Pak Fifty® SCBA (NIOSH Edition) ..... 4 - 7
Air-Pak NxG2™ SCBA (NIOSH Edition) ..... 8 - 10
Air-Pak 50i™ SCBA Assemblies 11
ISCBA™ Assemblies ..... 12 - 15
C100 SCBA Assemblies & Accessories 16
Swat-Pak™ SCBA 17

SCBA Accessories
Air-Pak Fifty & Air-Pak NxG2 SCBA Accessories 18
Cylinders and Valves 19

Supplied Airline Respirators
Ska-Pak® Respirator AT Assemblies ..... 20 - 23
Ska-Pak Plus Respirator Assemblies ..... 24 - 27
Ska-Pak Respirator Assemblies 28
E-Z Airline™ Respirator Assemblies & Hoses ..... 30 - 33

Portable Air Sources
Rit-Pak® II Emergency Air Supply 34
Carri-Air™ Portable Air Source 35
Mobile Air Cart 36
TRC-1 Air Cart 36

Escape Respirators
ELSA® Emergency Escape Breathing Device 37
Scram® Escape Respirator Assemblies 37

ACCOUNTABILITY

Firefighter Locator System
Pak-Tracker™ Firefighter Locator 38

Electronic Management System
SEMS™ 39

P.A.S.S. Device
Pak-Alert® SE+ PASS Device 39

Thermal Imaging Cameras
Eagle X™ Camera & Accessories 40
Eagle Imager™ 160 Camera and Accessories ..... 41 - 42
Eagle Imager 160 Receiver Kit 43

Communications
E-Z Radiocom™ II Communications Device 44
E-Z Radiocom™ I Communications Device 44
Talk-Around™ Communications Device 45
Hazmat Radiocom™ Communications Device 45
Con-Space® Link Communications Device 46
EPIC™ Voice Amplifier and Bracket 46
Radio Identification Table ..... 47 - 49

AIR PURIFYING RESPIRATORS

Full Facepiece Respirators
AV-3000® Facepiece (Top Down Convertible) ..... 50 - 53
AV-2000® Facepiece (Top Down Convertible) ..... 54 - 57
Scott-O-Vista® Facepiece (Top Down Convertible) ..... 58 - 60
Weld-O-Vista™ Facepiece (Top Down Convertible) ..... 61 - 64
Promask 25 Facepiece ..... 65 - 67
M110 CBRN Dual Facepiece 68
M120 CBRN Facepiece 69

Half-Mask Respirators
Xcel Halfmask ..... 70 - 71
Model 66™ Half-Mask Facepiece ..... 72 - 73

Powered Air Purifying Respirators
Tornado® Respirators Assemblies ..... 74 - 75
Proflow 2 PAPR & Accessories ..... 76 - 77
Proflow 3 PAPR & Accessories ..... 76 - 77
C420 PAPR Parts & Accessories ..... 78 - 79

Cartridges, Canisters and Filters
742 Cartridges 80
642 Cartridges 81
631 Series and 40mm Canisters 82
Facepiece Adapters 83
Fit Testing Kits and Accessories ..... 84 - 85

Escape Respirators
Speed-Evac® Respirator Assemblies, Part & Accessories 86

COMPRESSORS

Charge Stations
Guardian and Revolvair® Charge Stations 87

Compressors
Simple Air & Hush Air Compressors 88

Mobile Compressor System
Liberty I, Liberty II, & Liberty Slip-in Mobile Compressors 89

Easy Air
Electric & Gas models 90

Storage & Racks
Horizontal & Vertical 91

PORTABLE GAS DETECTION INSTRUMENTS

Multiple Gas Instruments
Plated Scout® Instrument ..... 92 - 93
Stealth Scout Instrument 94
Build a Scout Instrument ..... 95 - 99
Scout Instrument Charging and Calibration ..... 100 - 104

Single Gas Instruments
Proton® ZM and Proton Single Gas Detection ..... 105 - 106
Mini SA Portable Instrument ..... 107 - 109

Biodetection Instruments
Prime Alert® Biodetection System 110

This price list is intended for use only by Scott Health and Safety Authorized Distributors and their personnel and supercedes all previous price lists. Additional copies will be restricted to the quantity needed for distributor, inside and outside sales and management personnel only. Prices are subject to change without notice. Scott Health and Safety Terms of Conditions are applicable to this document. Should a copy of the Terms and Conditions be needed, they can be obtained by contacting Scott Health and Safety directly.

AIR-PAK® 75™ & AIR-PAK NXG7 SCBA

BUILT-TO SPECIFICATION CONFIGURATOR

NFPA 1981, 2007 & 1982, 2007 APPROVED

	SCBA Model	List Price	Harness	List Price	Pressure (psig)	List Price	Regulator	List Price	EBSS ❶	List Price	Wireframe & Air-Pak 75 SCBA: Airline Options ❷	List Price	Applicable options for all Air-Pak SCBA models: Console	List Price	Case ❸	List Price	Packaging	List Price
Wireframe & Air-Pak 75 SCBA	1 Wireframe SCBA	$4,368	1 Standard	N/C	2 2216	N/C	03 E-Z Flo+	N/C	0 None	N/C	0 None	N/C	1 Gauge & HUD Only	$1,177	0 None	N/C	1 1 SCBA per box	N/C
Wireframe & Air-Pak 75 SCBA	2 Air-Pak 75 SCBA	$2,813	2 Spring clips	N/C	3 3000	$164	04 E-Z Flo+ w/QC	$275	1 Standard	$267	1 Hansen	$225	2 PASS	$1,887	1 Hard Plastic	$86	2 2 SCBA per box	-$25
Wireframe & Air-Pak 75 SCBA					4 4500	$217			2 Dual	$509	2 Schrader	$225	3 Pak-Tracker™ Locator	$2,082	2 Soft Canvas	$100		
Wireframe & Air-Pak 75 SCBA											3 Hansen HK	$225						
Air-Pak NxG7 SCBA	3 Air-Pak NxG7 SCBA	$2,813	1 Standard	N/C	2 2216	N/C	07 E-Z Flo II+	$300	0 None	N/C	4 Foster	$225						
Air-Pak NxG7 SCBA			2 Spring clips	N/C	4 4500	$217	08 E-Z Flo II+ w QC	$325	2 Dual	$509	5 Cejn	$225						
Air-Pak NxG7 SCBA																		
Air-Pak NxG7 SCBA																		

Part Number:
Select a one or two digit number per box from the chart above that corresponds to your choice

AP	X	X	X	0	2	X X	X	X	0	X	X	X

❶ Standard EBSS requires a Quick Disconnect regulator for Air-Pak 75 SCBA
❷ Airline options not available on Air-Pak NxG7 SCBA or when dual EBSS is installed on Air-Pak 75 SCBA
❸ When ordering a case (soft or hard plastic) with any Air-Pak SCBA, you must choose one SCBA per box

NFPA 2007 edition Air-Pak SCBA's must be used with one of the AV-2000®/AV-3000™ facepieces listed below:

804191-74..... $233.00
805773-71..... $241.00
805773-72..... $241.00
805773-73..... $241.00

Price:
Select the price that corresponds to the number selected above

Total: Add up all costs

Example

Air-Pak 75 SCBA Model;
with spring clips;
for 4500 psig cylinder;
with E-Z Flo+ regulator with QC;
with dual EBSS;
including integrated PASS;
with hard plastic case;
shipped one per box

AP	2	2	4	0	2	0 4	2	0	0	2	1	1
	$2,813	$0	$217			$275	$509	$0		$1,887	$86	$0

$5,787

This price configurator is a guide to Scott's Air-Pak SCBA part numbers.

AIR-PAK® FIFTY™ SCBA

STANDARD HARNESS (NIOSH 42 CFR CERTIFIED)

Air-Pak Fifty™ SCBA

Standard Harness • Less Cylinder • Less Facepiece • E-Z Flo® Regulator

Part Number	Pressure (PSIG)	Standard Unit	Quick Connect Regulator	EBSS	Dual EBSS	Case	List Price
804936-0102	2216	●				●	$ 2,664.00
804936-0202	2216	●					$ 2,578.00
804936-0302	2216		●			●	$ 2,940.00
804936-0402	2216		●				$ 2,853.00
804936-0502	2216		●	●		●	$ 3,208.00
804936-0602	2216		●	●			$ 3,120.00
804936-0702	2216				●	●	$ 3,175.00
804936-0802	2216				●		$ 3,087.00
804936-0902	2216		●		●	●	$ 3,338.00
804936-1002	2216		●		●		$ 3,252.00
805065-0202	3000	●					$ 2,952.00
805065-0502	3000		●	●		●	$ 3,747.00
805065-1002	3000		●		●		$ 3,350.00
804935-0102	4500	●				●	$ 2,882.00
804935-0202	4500	●					$ 2,795.00
804935-0302	4500		●			●	$ 3,139.00
804935-0402	4500		●				$ 3,052.00
804935-0502	4500		●	●		●	$ 3,400.00
804935-0602	4500		●	●			$ 3,312.00
804935-0702	4500				●	●	$ 3,392.00
804935-0802	4500				●		$ 3,304.00
804935-0902	4500		●		●	●	$ 3,536.00
804935-1002	4500		●		●		$ 3,450.00

Note: Refer to pages 19 for Cylinder ordering information. Refer to pages 50-63 for facepieces ordering information.

Air-Pak Fifty™ SCBA

Spring Clips • Less Cylinder • Less Facepiece • E-Z Flo® Regulator

Part Number	Pressure (PSIG)	Standard Unit	Quick Connect Regulator	EBSS	Dual EBSS	Case	List Price
804936-5202	2216	●					$ 2,578.00
804936-5802	2216				●		$ 3,087.00
804936-5902	2216		●		●	●	$ 3,338.00
804935-5202	4500	●					$ 2,795.00
804935-5402	4500		●				$ 3,052.00
804935-5602	4500		●	●			$ 3,312.00
804935-5802	4500				●		$ 3,304.00
804935-5902	4500		●		●	●	$ 3,536.00

Air-Pak® SCBA

Standard Harness • Less Cylinder • Less Facepiece • E-Z Flo® Regulator

Part Number	Pressure (PSIG)	Standard Unit	Quick Connect Regulator	EBSS	Dual EBSS	Case	List Price
804938-0102	2216	●				●	$ 4,263.00
804938-0902	2216		●	●		●	$ 5,173.00
804937-0102	4500	●				●	$ 4,691.00
804937-0202	4500	●					$ 4,558.00

Note: Refer to pages 19 for Cylinder ordering information. Refer to pages 50-63 for facepieces ordering information.

Air-Pak Fifty™ SCBA

Standard Harness • Less Cylinder • Less Facepiece • E-Z Flo®+ Regulator

Part Number	Pressure (PSIG)	Standard Unit	Quick Connect Regulator	EBSS	Dual EBSS	Case	List Price
804936-0103	2216	●				●	$ 2,874.00
804936-0203	2216	●					$ 2,788.00
804936-0403	2216		●				$ 3,063.00
804936-0603	2216		●	●			$ 3,330.00
804936-0703	2216				●	●	$ 3,395.00
804936-0803	2216				●		$ 3,297.00
804936-0903	2216		●		●	●	$ 3,548.00
804936-1003	2216		●		●		$ 3,462.00
805065-0203	3000	●					$ 2,952.00
805065-1003	3000		●		●		$ 3,747.00
804935-0103	4500	●				●	$ 3,092.00
804935-0203	4500	●					$ 3,005.00
804935-0303	4500		●			●	$ 3,349.00
804935-0403	4500		●				$ 3,262.00
804935-0503	4500		●	●		●	$ 3,610.00
804935-0603	4500		●	●			$ 3,522.00
804935-0703	4500				●	●	$ 3,602.00
804935-0803	4500				●		$ 3,514.00
804935-0903	4500		●		●	●	$ 3,746.00
804935-1003	4500		●		●		$ 3,660.00

Note: Refer to pages 19 for Cylinder ordering information. Refer to pages 50-63 for facepieces ordering information.

Air-Pak Fifty™ SCBA

Spring Clips • Less Cylinder • Less Facepiece • E-Z Flo® + Regulator

Part Number	Pressure (PSIG)	Standard Unit	Quick Connect Regulator	EBSS	Dual EBSS	Case	List Price
804936-5203	2216	●					$ 2,788.00
804935-5103	4500	●				●	$ 3,144.00
804935-5203	4500	●					$ 3,005.00
804935-5403	4500		●				$ 3,262.00
804935-5503	4500		●	●		●	$ 3,610.00
804935-5603	4500		●	●			$ 3,522.00
804935-5803	4500				●		$ 3,514.00
804935-5903	4500		●		●	●	$ 3,746.00
804935-6003	4500		●		●		$ 3,660.00

Air-Pak® SCBA

Standard Harness • Less Cylinder • Less Facepiece • E-Z Flo® + Regulator

Part Number	Pressure (PSIG)	Standard Unit	Quick Connect Regulator	EBSS	Dual EBSS	Case	List Price
804937-0103	4500	●				●	$ 4,907.00
804937-0203	4500	●					$ 4,774.00
804937-0403	4500		●				$ 5,254.00
804937-1203	4500				●		$ 5,471.00

Note: Refer to pages 19 for Cylinder ordering information. Refer to pages 50-63 for facepieces ordering information.

Air-Pak® 4.5 SCBA

Padded Harness • Voice Amplifier • AV-3000™ Facepiece • E-Z Flo® + Regulator

Part Number	Cylinder Duration	List Price
804861-2802	None	$ 4,687.00
804861-3702	30 Minute	$ 5,597.00
804861-3802	45 Minute	$ 5,917.00

AIR-PAK® NxG2™ SCBA

NEXT GENERATION ((NIOSH 42 CFR CERTIFIED))

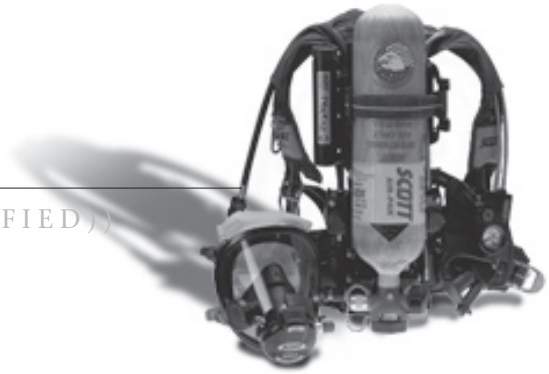

Air-Pak NxG2™ SCBA

Standard Harness • Less Cylinder • Less Facepiece • E-Z Flo®II Regulator

Part Number	Pressure (PSIG)	Standard Unit	Quick Connect Regulator	Dual EBSS	Console	Case	List Price
200300-01	2216	●			Gauge	●	$ 2,651.00
200300-02	2216	●			Gauge		$ 2,574.00
200300-06	2216			●	Gauge		$ 3,027.00
200301-01	2216	●			PASS	●	$ 3,281.00
200301-02	2216	●			PASS		$ 3,204.00
200301-03	2216		●		PASS	●	$ 3,511.00
200301-04	2216		●		PASS		$ 3,434.00
200301-05	2216			●	PASS	●	$ 3,734.00
200301-06	2216			●	PASS		$ 3,657.00
200301-07	2216		●	●	PASS	●	$ 3,964.00
200301-08	2216		●	●	PASS		$ 3,887.00
200302-06	2216			●	SEMS™		$ 4,677.00

Air-Pak NxG2™ SCBA

Spring Clips • Less Cylinder • Less Facepiece • E-Z Flo® II Regulator

Part Number	Pressure (PSIG)	Standard Unit	Quick Connect Regulator	Dual EBSS	Console	Case	List Price
200302-58	2216		●	●	SEMS™		$ 4,907.00

Note: Refer to pages 19 for Cylinder ordering information. Refer to pages 50-63 for facepieces ordering information.

Air-Pak NxG2™ SCBA

Spring Clips • Less Cylinder • Less Facepiece • E-Z Flo® + Regulator

Part Number	Pressure (PSIG)	Standard Unit	Quick Connect Regulator	Dual EBSS	Console	Case	List Price
200309-01	4500	●			Gauge	●	$ 2,862.00
200309-02	4500	●			Gauge		$ 2,785.00
200309-03	4500		●		Gauge	●	$ 3,092.00
200309-05	4500			●	Gauge	●	$ 3,315.00
200309-08	4500		●	●	Gauge		$ 3,468.00
200310-01	4500	●			PASS	●	$ 3,492.00
200310-02	4500	●			PASS		$ 3,415.00
200310-04	4500		●		PASS		$ 3,645.00
200310-05	4500			●	PASS	●	$ 3,945.00
200310-06	4500			●	PASS		$ 3,868.00
200310-07	4500		●	●	PASS	●	$ 4,175.00
200302-08	4500		●	●	PASS		$ 4,907.00
200311-02	4500	●			SEMS™		$ 4,435.00
200311-04	4500		●		SEMS		$ 4,665.00
200311-06	4500			●	SEMS		$ 4,888.00
200311-08	4500		●	●	SEMS		$ 5,118.00

Air-Pak® SCBA

Standard Harness • Less Cylinder • Less Facepiece • E-Z Flo® + Regulator

Part Number	Pressure (PSIG)	Standard Unit	Quick Connect Regulator	Dual EBSS	Console	Case	List Price
200311-58	4500		●	●	SEMS		$ 5,118.00

Note: Refer to pages 19 for Cylinder ordering information. Refer to pages 50-63 for facepieces ordering information.

Air-Pak NxG2™ SCBA

Standard Harness • Less Cylinder • Less Facepiece • E-Z Flo®II+ Regulator

Part Number	Pressure (PSIG)	Standard Unit	Quick Connect Regulator	Dual EBSS	Console	Case	List Price
200321-06	2216			●	Gauge		$ 3,227.00
200322-01	2216	●			PASS	●	$ 3,481.00
200322-02	2216	●			PASS		$ 3,404.00
200322-05	2216			●	PASS	●	$ 3,934.00
200322-06	2216			●	PASS		$ 3,857.00
200322-07	2216		●	●	PASS	●	$ 4,164.00
200322-08	2216		●	●	PASS		$ 4,087.00
200323-07	2216		●	●	SEMS™	●	$ 5,184.00

Air-Pak NxG2™ SCBA

Standard Harness • Less Cylinder • Less Facepiece • E-Z Flo®II+ Regulator

Part Number	Pressure (PSIG)	Standard Unit	Quick Connect Regulator	Dual EBSS	Console	Case	List Price
200330-02	4500	●			Gauge		$ 2,985.00
200330-07	4500		●	●	Gauge	●	$ 3,745.00
200331-01	4500	●			PASS	●	$ 3,692.00
200331-02	4500	●			PASS		$ 3,615.00
200331-04	4500		●		PASS		$ 3,845.00
200331-05	4500			●	PASS	●	$ 4,145.00
200331-06	4500			●	PASS		$ 4,068.00
200331-07	4500		●	●	PASS	●	$ 4,375.00
200331-08	4500		●	●	PASS		$ 4,298.00
200332-04	4500		●		SEMS™		$ 4,865.00
200332-06	4500			●	SEMS™		$ 5,088.00
200332-08	4500		●	●	SEMS™		$ 5,318.00

Air-Pak NxG2™ SCBA

Spring Clips • Less Cylinder • Less Facepiece • E-Z Flo® II Regulator

Part Number	Pressure (PSIG)	Standard Unit	Quick Connect Regulator	Dual EBSS	Console	Case	List Price
200331-56	4500			●	PASS		$ 4,068.00
200331-58	4500		●	●	PASS		$ 4,298.00

Note: Refer to pages 19 for Cylinder ordering information. Refer to pages 50-63 for facepieces ordering information.

AIR-PAK® 50*i* SCBA

STANDARD HARNESS ((NIOSH 42 CFR CERTIFIED))

2.2 Air-Pak 50*i*™ SCBA

Standard Harness • Less Cylinder • Less Facepiece • E-Z Flo® Regulator

Part Number	Standard Unit	Quick Connect Regulator	Dual EBSS	Case	List Price
200470-01N	●			●	$ 1,922.00
200470-02N	●				$ 1,823.00
200470-03N		●		●	$ 2,106.00
200470-04N		●			$ 2,008.00

3.0 Air-Pak 50*i*™ SCBA

Standard Harness • Less Cylinder • Less Facepiece • E-Z Flo Regulator

Part Number	Standard Unit	Quick Connect Regulator	Dual EBSS	Case	List Price
200471-01N	●			●	$ 2,108.00
200471-02N	●				$ 2,010.00
200471-03N		●		●	$ 2,431.00
200471-04N		●			$ 2,331.00

4.5 Air-Pak 50*i*™ SCBA

Standard Harness • Less Cylinder • Less Facepiece •E-Z Flo Regulator

Part Number	Standard Unit	Quick Connect Regulator	Dual EBSS	Case	List Price
200472-01N	●			●	$ 2,167.00
200472-02N	●				$ 2,067.00
200472-03N		●		●	$ 2,329.00
200472-04N		●			$ 2,232.00

Note: Refer to pages 19 for Cylinder ordering information. Refer to pages 50-63 for facepieces ordering information.

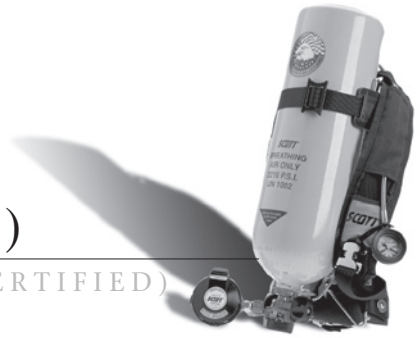

INDUSTRIAL SCBA (ISCBA™)

ASSEMBLIES & ACCESSORIES (NIOSH 42 CFR CERTIFIED)

FastTrax

Select part numbers from this product line are part of the Scott Fast Trax Program. Contact your Regional Manager or Scott Customer Service for more details.

ISCBA™ With 30-Minute, 2216 psig Aluminum Cylinder • Less Facepiece
Mask Not Included, Order Separately

Part Numbers	Harness	Regulator	Manifold	List Price
804616-14	Nylon w/Plastic Buckle	E-Z Flo	Single	$ 1,536.00
804616-15	Nylon w/Plastic Buckle	E-Z Flo	Dual	$ 1,651.00
804616-16	Kevlar w/Metal Buckle	E-Z Flo	Single	$ 1,661.00
804616-17	Kevlar w/Metal Buckle	E-Z Flo	Dual	$ 1,776.00

ISCBA™ with 30-Minute, 2216 psig Carbon Cylinder
Mask Not Included, Order Separately

Part Numbers	Harness	Regulator	Manifold	List Price
804939-03	Nylon w/Plastic Buckle	E-Z Flo®	Single	$ 1,965.00
804939-04	Nylon w/Plastic Buckle	E-Z Flo	Dual	$ 2,080.00
804939-05	Kevlar w/Metal Buckle	E-Z Flo	Single	$ 2,090.00
804939-06	Kevlar w/Metal Buckle	E-Z Flo	Dual	$ 2,205.00
805383-14	Nylon w/Plastic Buckle	E-Z Flo w/Modulair™	Single	$ 2,183.00

ISCBA™ with 30-Minute, 4500 psig Carbon Cylinder
Mask Not Included, Order Separately

Part Numbers	Harness	Regulator	Manifold	List Price
804940-03	Nylon w/Plastic Buckle	E-Z Flo®	Single	$ 2,137.00
804940-04	Nylon w/Plastic Buckle	E-Z Flo	Dual	$ 2,252.00
804940-05	Kevlar w/Metal Buckle	E-Z Flo	Single	$ 2,262.00
804940-06	Kevlar w/Metal Buckle	E-Z Flo	Dual	$ 2,377.00
805384-12	Kevlar w/Metal Buckle	E-Z Flo w/Modulair™	Single	$ 2,480.00

ISCBA™ with 45-Minute, 4500 psig Carbon Cylinder
Mask Not Included, Order Separately

Part Numbers	Harness	Regulator	Manifold	List Price
804941-03	Nylon w/Plastic Buckle	E-Z Flo®	Single	$ 2,457.00
804941-04	Nylon w/Plastic Buckle	E-Z Flo	Dual	$ 2,572.00

ISCBA™ with 60-Minute, 4500 psig Carbon Cylinder
Mask Not Included, Order Separately

Part Numbers	Harness	Regulator	Manifold	List Price
804942-03	Nylon w/Plastic Buckle	E-Z Flo®	Single	$ 2,609.00
804942-04	Nylon w/Plastic Buckle	E-Z Flo	Dual	$ 2,724.00

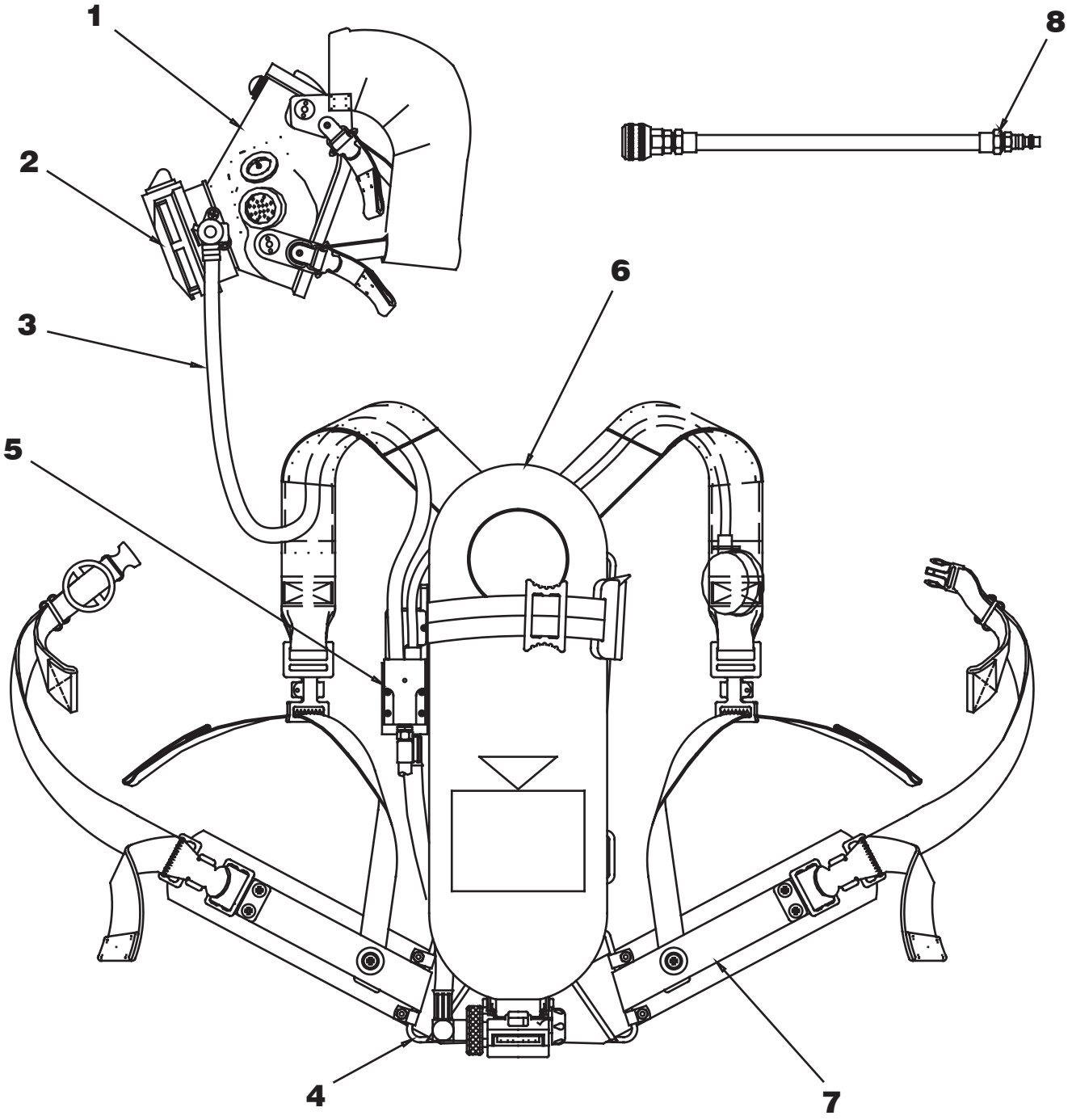
1
2
3
4
5
6
7
8

Industrial SCBA Parts & Accessories

Item Number	Description	Pieces Per Pkg	Part Number	List Price
1	*FACEPIECE*			
1a	AV-3000® Facepiece	See Page50		
1b	AV-2000® Facepiece	See Page 54		
1c	Scott-O-Vista® Facepiece	See Page 58		
2	*REGULATOR*			
2a	E-Z Flo®	1	804441-04	$ 375.85
2b	E-Z Flo with Modulair™ Quick Connect	1	804441-05	$ 355.00
3	Quick Connect Low Pressure Hose Assembly	1	804678-01	$ 117.70
4	*BACKFRAME AND HARNESSES*			
4a	Kevlar® with Metal Buckles	1	804621-02	$ 542.20
4b	Nylon with Plastic Buckles	1	804621-03	$ 465.50
5	*PRESSURE REDUCERS*			
5a	2216 psig, Single Port	1	804619-01	$ 731.20
5b	2216 psig, Dual Port	1	804619-02	$ 807.85
5e	4500 psig, Dual Port	1	804642-01	$ 793.10
5f	4500 psig, Dual Port	1	804642-02	$ 870.05
6	*CYLINDER AND VALVE ASSEMBLIES*			
6a	Aluminum, 30-Minute, 2216 psig	1	804101-01	$ 526.00
6b	Carbon, 30-Minute, 2216 psig	1	804840-01	$ 955.00
6c	Carbon, 30-Minute, 4500 psig	1	804721-01	$ 910.00
6d	Carbon, 45-Minute, 4500 psig	1	804722-01	$ 1,230.00
6e	Carbon, 60-Minute, 4500 psig	1	804723-01	$ 1,382.00
7	*AIRLINE HOSE AND FITTINGS*			
7a	Airline Accessory Hose, Hansen Fitting	1	27537-01	$ 239.95
7b	Airline Accessory Hose, Schrader Fitting	1	27537-02	$ 239.95
7c	Airline Accessory Hose, Hansen HK Fitting	1	27537-03	$ 239.95
8	*SUPPLY HOSES*	See Page 32		
Not shown	Hard Carrying Case, Air-Pak Fifty / Swat-Pak™ / ISCBA / C100	1	804497-01	$ 242.45
Not shown	Soft Carrying Case, Air-Pak Fifty / Swat-Pak / ISCBA / C100	1	10009324	$ 114.40

C100 SCBA

(NIOSH 42 CFR CERTIFIED)

Select part numbers from this product line are part of the Scott Fast Trax Program. Contact your Regional Manager or Scott Customer Service for more details.

C100 SCBA

Part Number	Description	List Price
200051-01	C100 SCBA, 2216 psi, 30 min. Aluminum Cylinder, Small/Medium Neoprene Facepiece, EPDM head harness	$ 1,304.00
200052-01	C100 SCBA, 2216 psi, 30 min. Aluminum Cylinder, Medium/Large Neoprene Facepiece, EPDM head harness	$ 1,304.00
200053-01	C100 SCBA, 2216 psi, 30 min. Aluminum Cylinder, Small/Medium Neoprene Facepiece, Polyester head harness	$ 1,337.00
200054-01	C100 SCBA, 2216 psi, 30 min. Aluminum Cylinder, Medium/Large Neoprene Facepiece, Polyester head harness	$ 1,337.00

C100 SCBA Accessories and Parts

Part Number	Description	List Price
200049-01	Spare 30 Minute Aluminum Cylinder and Valve Accessories, 2216 psi	$ 520.20
1033262	Facepiece for C100 SCBA, Medium/Large Neoprene w/EPDM Head Harness	$ 129.60
1033263	Facepiece for C100 SCBA, Medium/Large Neoprene w/Polyester Head Harness	$ 162.75
1032424	Facepiece for C100 SCBA, Small/Medium Neoprene w/EPDM Head Harness	$ 129.60
1032425	Facepiece for C100 SCBA, Small/Medium Neoprene w/Polyester Head Harness	$ 162.75
804497-01	Hard Carrying Case, Air-Pak® Fifty™ SCBA / Swat-Pak™ SCBA / ISCBA™ /C100 SCBA	$ 242.45
10009324	Soft Carrying Case, Air-Pak Fifty SCBA / Swat-Pak SCBA/ ISCBA /C100 SCBA	$ 114.40

SWAT-PAK™

TACTICAL SCBA

2.2 SWAT-Pak SCBA, featuring the E-Z Flo® I Regulator with Vibralert® includes: Black Kevlar® Harness, Comfort Seal AV-2000® Facepiece with Kevlar Head Harness, and QD on regulator

Part Number	EBSS w/ 6'Hose	Quick Charge	Soft Case	List Price
805454-30			●	$ 2,800.00
805454-31	●		●	$ 3,348.00
805454-32		●	●	$ 3,407.00
805454-33	●	●	●	$ 3,955.00

4.5 SWAT-Pak SCBA, featuring the E-Z Flo Regulator with Vibralert includes: Black Kevlar Harness, Comfort Seal AV-2000 Facepiece with Kevlar Head Harness, and QD on regulator

Part Number	EBSS w/ 6'Hose	Quick Charge	Case	List Price
805454-60			●	$ 3,010.00
805454-61	●		●	$ 3,558.00
805454-62		●	●	$ 3,617.00
805454-63	●	●	●	$ 4,165.00

2.2 SWAT-Pak SCBA First Responder Edition*, Black Kevlar harness, AV-2000 facepiece with Kevlar head harness (Comfort Seal™), Quick Connect E-Z Flo Plus CBRN regulator, Heads-Up Display, and RIC/UAC. NIOSH CBRN SCBA performance compliant.

Part Number	EBSS w/ 6'Hose	Dual EBSS	Case	List Price
805454-413			●	$ 3,696.00
805454-414	●		●	$ 4,244.00
805454-415		●	●	$ 4,244.00

4.5 SWAT-Pak SCBA First Responder Edition*, Black Kevlar harness, AV-2000 facepiece with Kevlar head harness (Comfort Seal™), Quick Connect E-Z Flo Plus CBRN regulator, Heads-Up Display, and RIC/UAC. NIOSH CBRN SCBA performance compliant.

Part Number	EBSS w/ 6'Hose	Dual EBSS	Case	List Price
805454-416			●	$ 3,906.00
805454-417	●		●	$ 4,454.00
805454-418		●	●	$ 4,454.00

•Note: First Responder Edition includes the HUD but does not include the Vibralert for stealth operations.
Note: For cylinder ordering information refer to page 9.

Air-Pak® Fifty™ 2.2/3.0/4.5/ /NxG$_2$™ SCBA ACCESSORIES

Part Number	Description	List Price
10008880	Mask Mounted Regulator Holder	$ 22.45
10009324	Air-Pak Fifty SCBA Soft Side Carry Case	$ 114.40
27537-01	Hansen Extended Duration Hose	$ 239.95
27537-02	Schrader Extended Duration Hose	$ 239.95
27537-03	Hansen HK Extended Duration Hose	$ 239.95
27537-05	Hansen Extended Duration Hose Retainer	$ 162.90
27537-06	Schrader Extended Duration Hose Retainer	$ 162.90
6538-00	Air-Pak® Fifty SCBA Wall Case	$ 1,052.75
80007-02	Air-Pak Fifty SCBA 4.5 Walk-Away Bracket for 45 & 60 Min Cylinder	$ 292.10
80008-02	Air-Pak Fifty SCBA 4.5 Walk-Away Bracket for 45 & 60 Min Cylinder	$ 292.10
802100-01	Wall Mount Kit	$ 95.75
802162-01	Air-Pak Fifty SCBA IIA, 2.2/30 min, 4.5/60 min, Carrying Case	$ 251.10
803246-01	Air-Pak Fifty SCBA 2.2, 30 min, Bubble Wall Case	$ 908.55
803246-02	Air-Pak Fifty SCBA 4.5, 30 min, Bubble Wall Case	$ 908.55
803246-03	Air-Pak Fifty SCBA 4.5, 60 min, Bubble Wall Case	$ 908.55
804497-01	Air-Pak Fifty™ SCBA Hard Carrying Case	$ 242.45
804594-01	Mask Hook Assembly	$ 15.00
805511-01	Chest Strap, Air-Pak Fifty	$ 24.90
805534-01	Polyester Fleece Facepiece Bag	$ 20.60
200170-02	Dual EBSS Retrofit Kit, Air-Pak Fifty w/Pouch**	$ 620.20
200170-03	Dual EBSS Retrofit Kit, Wireframe w/Pouch**	$ 620.20
200112-01	Hansen Adapter, Dual EBSS/Ext. Duration	$ 228.70
200112-02	Foster Adapter, Dual EBSS/Ext. Duration	$ 228.70
200112-03	Hansen HK Adapter, Dual EBSS/Ext. Duration	$ 228.70
200112-04	Schrader Adapter, Dual EBSS/Ext. Duration	$ 228.70

*** Requires the purchase of dual outlet manifolds if not already installed on the Air-Pak SCBA*

CYLINDER & VALVE

30,45&60 MINUTE ASSEMBLIES

2216 psig 30 Minute Cylinder & Valve Assemblies

Part Number	Aluminum	Carbon	Cylinder Valve	List Price
29000-00	●			$ 355.00
10010063		●		$ 797.00
804101-01	●		●	$ 526.00
804840-01		●	●	$ 955.00
200131-01*		●	●	$ 955.00

3000 psig 30 Minute Cylinder & Valve Assemblies

Part Number	Carbon	Cylinder Valve	List Price
10010580	●		$ 803.00
805044-01	●	●	$ 1,107.00

4500 psig, 30 Minute Cylinder & Valve Assemblies

Part Number	Carbon	Cylinder Valve	List Price
10009671	●		$ 763.00
804721-01	●	●	$ 910.00
200128-01*	●	●	$ 910.00

4500 psig, 45 Minute Cylinder & Valve Assemblies

Part Number	Carbon	Cylinder Valve	List Price
10009673	●		$ 1,082.00
804722-01	●	●	$ 1,230.00
200129-01*	●	●	$ 1,230.00

4500 psig, 60 Minute Cylinder & Valve Assemblies

Part Number	Carbon	Cylinder Valve	List Price
10009672	●		$ 1,244.00
804723-01	●	●	$ 1,382.00
200130-01*	●	●	$ 1,382.00

**Cylinder and valve for NxG series SCBA only*

SKA-PAK AT®

RESPIRATOR ASSEMBLIES

FastTrax

Select part numbers from this product line are part of the Scott Fast Trax Program. Contact your Regional Manager or Scott Customer Service for more details.

Ska-Pak AT Respirator 2216 psi, 3-Minute Aluminum Cylinder

Part Numbers	Harness	Facepiece	Head Harness	Faceseal Size	Regulator	Hose Fitting	List Price
200063-52	Nylon	AV-2000®	Kevlar®	Comfort Seal	Standard	Hansen	$ 1,811.00
200063-53	Kevlar	None	None	None	Standard	Hansen	$ 1,697.00
200063-58	FBH	AV-2000	Kevlar	Comfort Seal	QD	Hansen	$ 1,999.00

Ska-Pak AT Respirator 3000 psi, 5-Minute Hoop-Wrap Fiberglass Cylinder

Part Numbers	Harness	Facepiece	Head Harness	Faceseal Size	Regulator	Hose Fitting	List Price
200063-05	Nylon	AV-2000	Kevlar	Comfort Seal	Standard	Hansen	$ 1,842.00
200063-06	Nylon	AV-2000	Kevlar	Comfort Seal	Standard	Schrader	$ 1,842.00
200063-01	Kevlar	AV-2000	Kevlar	Comfort Seal	Standard	Hansen	$ 1,950.00
200063-38	FBH	AV-2000	Kevlar	Comfort Seal	Standard	Hansen	$ 1,993.00
200063-42	FBH	AV-2000	Kevlar	Comfort Seal	QD	Hansen	$ 2,033.00

Ska-Pak AT Respirator 3000 psi, 5-Minute Hoop-Wrap Fiberglass Cylinder

Part Numbers	Harness	Facepiece	Head Harness	Faceseal Size	Regulator	Hose Fitting	List Price
200064-05	Nylon	AV-2000	Kevlar	Comfort Seal	Standard	Hansen	$ 1,872.00
200064-06	Nylon	AV-2000	Kevlar	Comfort Seal	Standard	Schrader	$ 1,872.00
200064-01	Kevlar	AV-2000	Kevlar	Comfort Seal	Standard	Hansen	$ 1,979.00
200064-02	Kevlar	AV-2000	Kevlar	Comfort Seal	Standard	Schrader	$ 1,979.00
200064-38	FBH	AV-2000	Kevlar	Comfort Seal	Standard	Hansen	$ 2,023.00
200064-39	FBH	AV-2000	Kevlar	Comfort Seal	Standard	Schrader	$ 2,023.00
200064-11	Kevlar	None	None	None	Standard	Hansen	$ 1,742.00
200064-12	Nylon	None	None	None	Standard	Hansen	$ 1,635.00

Ska-Pak AT Respirator 4500 psi, 10-Minute Hoop-Wrap Fiberglass Cylinder

Part Numbers	Harness	Facepiece	Head Harness	Faceseal Size	Regulator	Hose Fitting	List Price
200064-50	Kevlar®	AV-2000®	Kevlar®	Comfort Seal	Standard	Hansen	$2,010.00
200064-55	Kevlar	AV-2000	Kevlar	Comfort Seal	QD	Hansen	$ 2,051.00
200064-57	Nylon	AV-2000	Kevlar	Comfort Seal	QD	Hansen	$ 1,944.00
200064-71	Kevlar	None	None	None	Standard	Cejn	$ 1,811.00
200064-115	FBH	AV-2000	Kevlar	Comfort Seal	Standard	Hansen	$ 2,054.00

Ska-Pak AT Respirator 3000 psi, 15-Minute Hoop-Wrap Fiberglass Cylinder

Part Numbers	Harness	Facepiece	Head Harness	Faceseal Size	Regulator	Hose Fitting	List Price
200120-01	Nylon	AV-2000	Kevlar	Comfort Seal	Standard	Hansen	$ 1,904.00
200120-02	Nylon	None	None	None	Standard	Hansen	$ 1,664.00
200120-04	Nylon	None	None	None	Standard	Schrader	$ 1,664.00

Ska-Pak AT Respirator Upgrade Kits - Upgrade Ska-Pak Plus Respirator assemblies to Ska-Pak AT Respirator

Part Numbers	Description	List Price
200100-01	2.2 Ska-Pak AT Respirator Kit	$ 1,145.00
200100-02	3.0 Ska-Pak AT Respirator Kit	$ 1,145.00
200100-03	4.5 Ska-Pak AT Respirator Kit	$ 1,145.00

Includes reducer of appropriate pressure, regulator and cylinder indicator. Contact Technical Support for details on upgrading units that include the full body harness.

NOTE: All full body harnesses (FBH) are size medium unless otherwise specified.

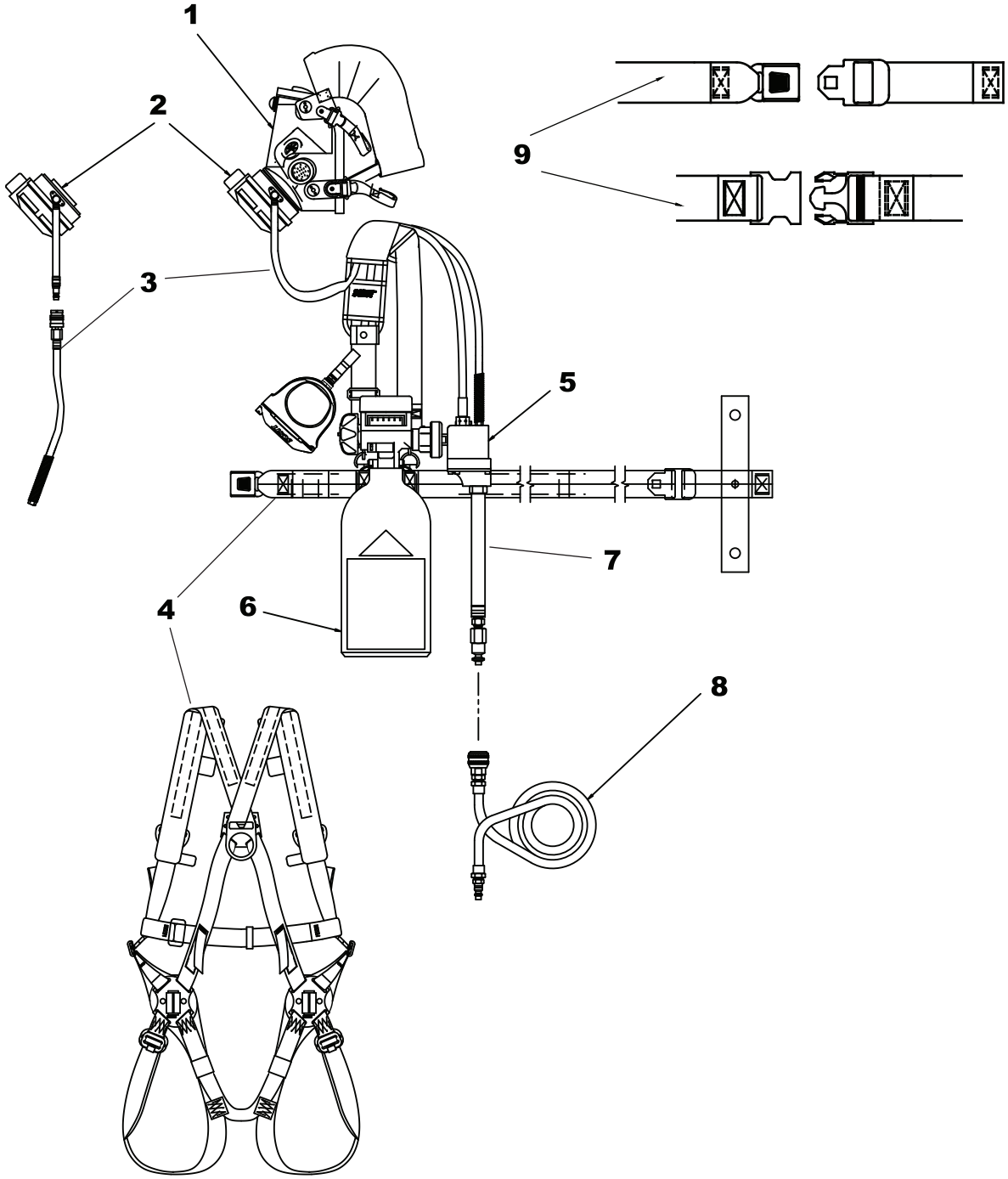
1
2
3
4
5
6
7
8
9

Ska-Pak AT Facepiece Part & Accessories

Item Number	Description	Pieces Per Pkg	Part Number	List Price
1	*FACEPIECE*			
1a	AV-3000® Facepiece	See Page50		
1b	AV-2000® Facepiece	See Page 54		
1c	Scott-O-Vista® Facepiece	See Page 58		
2	*REGULATOR*			
2a	E-Z Flo®	1	804370-09	$ 664.40
2b	E-Z Flo with Quick Connect	1	804370-02	$ 696.00
3	Quick Connect Hose Assembly	1	804694-05	$ 119.00
4	*HARNESSES*			
4a	Kevlar®	1	804981-01	$ 235.00
4b	Nylon	1	804982-01	$ 118.00
4c	Fall Protection	1	805061-04	$ 471.00
5	*PRESSURE REDUCERS*			
5a	2216/3000	1	200031-03	$ 421.00
5b	4500 psig, Entry/Engress	1	200031-04	$ 421.00
6	*CYLINDER AND VALVE ASSEMBLIES*			
6a	Aluminum, 2216 psig	1	805031-01	$ 298.00
6b	Full Wrap Fiberglass, 5-Minute, 3000 psig	1	804988-01	$ 479.00
6c	Full Wrap Fiberglass, 10-Minute, 3000 psig	1	804978-01	$ 541.00
6d	Hoop Wrap Fiberglass, 10-Minute, 4500 psig	1	805032-01	$ 546.00
7	*AIRLINE HOSE AND FITTINGS*			
7a	Airline Hose with Hansen/Foster Fitting	1	804305-01	$ 80.60
7b	Airline Hose with Schrader Fitting	1	804305-02	$ 80.60
7c	Airline Hose with Hansen HK Fitting Plug	1	804305-03	$ 148.30
8	*AIRLINE SUPPLY HOSES*	See Page 32		
9	*WAIST EXTENSION BELTS*			
9a	Kevlar Extension Belt, 1.5 Inches Wide	1	805088-01	$ 23.70
9b	Nylon Extension Belt, 2 Inches Wide	1	805088-02	$ 22.15

SKA-PAK® PLUS

RESPIRATOR ASSEMBLIES

FastTrax

Select part numbers from this product line are part of the Scott Fast Trax Program. Contact your Regional Manager or Scott Customer Service for more details.

Ska-Pak Plus Respirator With 2216 psig, 5-minute Aluminum Cylinder, Entry/Egress

Part Numbers	Harness	Facepiece	Head Harness	Faceseal Size	Regulator	Hose Fitting	List Price
804986-50	Kevlar®	AV-2000®	Kevlar®	Comfort Seal™	E-Z Flo®	Hansen	$ 1,504.00
804986-55	Nylon	AV-2000	Kevlar	Comfort Seal	E-Z Flo® w/Modulair	Hansen	$ 1,34300
804986-79	Kevlar w/Metal Buckle	Facepiece not included, order separately			E-Z Flo	Hansen	$ 1,204.00
804986-80	Nylon w/Plastic Buckle	Facepiece not included, order separately			E-Z Flo	Hansen	$ 1,101.00
804986-58	Full Body, Medium	AV-2000	Kevlar	Comfort Seal	E-Z Flo w/Modulair	Hansen	$ 1,623.00
804986-81	Full Body, Medium	Facepiece not included, order separately			E-Z Flo	Hansen	$ 1,371.00

Ska-Pak Plus Respirator With 3000 psig, 5-minute Fiberglass Cylinder, Entry/Egress

Part Numbers	Harness	Facepiece	Head Harness	Faceseal Size	Regulator	Hose Fitting	List Price
804986-01	Kevlar w/Metal Buckle	AV-2000®	Kevlar®	Comfort Seal	E-Z Flo®	Hansen	$ 1,457.00
804986-02	Kevlar w/Metal Buckle	AV-2000	Kevlar	Comfort Seal	E-Z Flo	Schrader	$ 1,457.00
804986-05	Nylon w/Plastic Buckle	AV-2000	Kevlar	Comfort Seal	E-Z Flo	Hansen	$ 1,352.00
804986-30	Nylon w/Plastic Buckle	Scott-O-Vista®	Polyester	Comfort Seal	E-Z Flo	Hansen	$ 1,235.00

Ska-Pak® Plus Respirator With 3000 psig, 5-minute Fiberglass Cylinder, Entry/Egress

Part Numbers	Harness	Facepiece	Head Harness	Faceseal Size	Regulator	Hose Fitting	List Price
804986-15	Kevlar w/Metal Buckle	AV-2000	Kevlar	Comfort Seal	E-Z Flo w/Modulair	Hansen	$ 1,499.00
804986-19	Nylon w/Plastic Buckle	AV-2000	Kevlar	Comfort Seal	E-Z Flo w/Modulair	Hansen	$ 1,394.00
804986-82	Kevlar w/Metal Buckle	Facepiece not included, order separately			E-Z Flo	Hansen	$ 1,259.50
804986-83	Nylon w/Plastic Buckle	Facepiece not included, order separately			E-Z Flo	Hansen	$ 1,156.00
804986-38	Full Body, Medium	AV-2000	Kevlar	Comfort Seal	E-Z Flo	Hansen	$ 1,625.00
804986-84	Full Body, Medium	Facepiece not included, order separately			E-Z Flo	Hansen	$ 1,533.00

Ska-Pak Plus Respirator With 3000 psig, 10-minute Fiberglass Cylinder, Entry/Egress

Part Numbers	Harness	Facepiece	Head Harness	Faceseal Size	Regulator	Hose Fitting	List Price
804987-01	Kevlar® w/Metal Buckle	AV-2000	Kevlar	Comfort Seal	E-Z Flo	Hansen	$ 1,500.00
804987-02	Kevlar w/Metal Buckle	AV-2000	Kevlar	Comfort Seal	E-Z Flo	Schrader	$ 1,500.00
804987-05	Nylon w/Plastic Buckle	AV-2000	Kevlar	Comfort Seal	E-Z Flo	Hansen	$ 1,395.00
804987-30	Nylon w/Plastic Buckle	Scott-O-Vista®	Polyester	Comfort Seal	E-Z Flo	Hansen	$ 1,275.00
804987-15	Kevlar w/Metal Buckle	AV-2000	Kevlar	Comfort Seal	E-Z Flo w/Modulair	Hansen	$ 1,541.00
804987-19	Nylon w/Plastic Buckle	AV-2000	Kevlar	Comfort Seal	E-Z Flo w/Modulair	Hansen	$ 1,436.00
804987-60	Kevlar w/Metal Buckle	Facepiece not included, order separately			E-Z Flo	Hansen	$ 1,290.00
804987-61	Nylon w/ Plastic Buckle	Facepiece not included, order separately			E-Z Flo	Hansen	$ 1,185.00
804987-38	Full Body, Medium	AV-2000	Kevlar	Comfort Seal	E-Z Flo	Hansen	$ 1,667.00
804987-42	Full Body, Medium	AV-2000	Kevlar	Comfort Seal	E-Z Flo w/Modulair	Hansen	$ 1,716.00
804987-62	Full Body, Medium	Facepiece not included, order separately			E-Z Flo	Hansen	$ 1,500.00

Ska-Pak Plus Respirator With 4500 psig, 10-minute Fiberglass Cylinder, Entry/Egress

Part Numbers	Harness	Facepiece	Head Harness	Faceseal Size	Regulator	Hose Fitting	List Price
804987-50	Kevlar w/ Metal Buckle	AV-2000	Kevlar	Comfort Seal	E-Z Flo	Hansen	$ 1,497.00

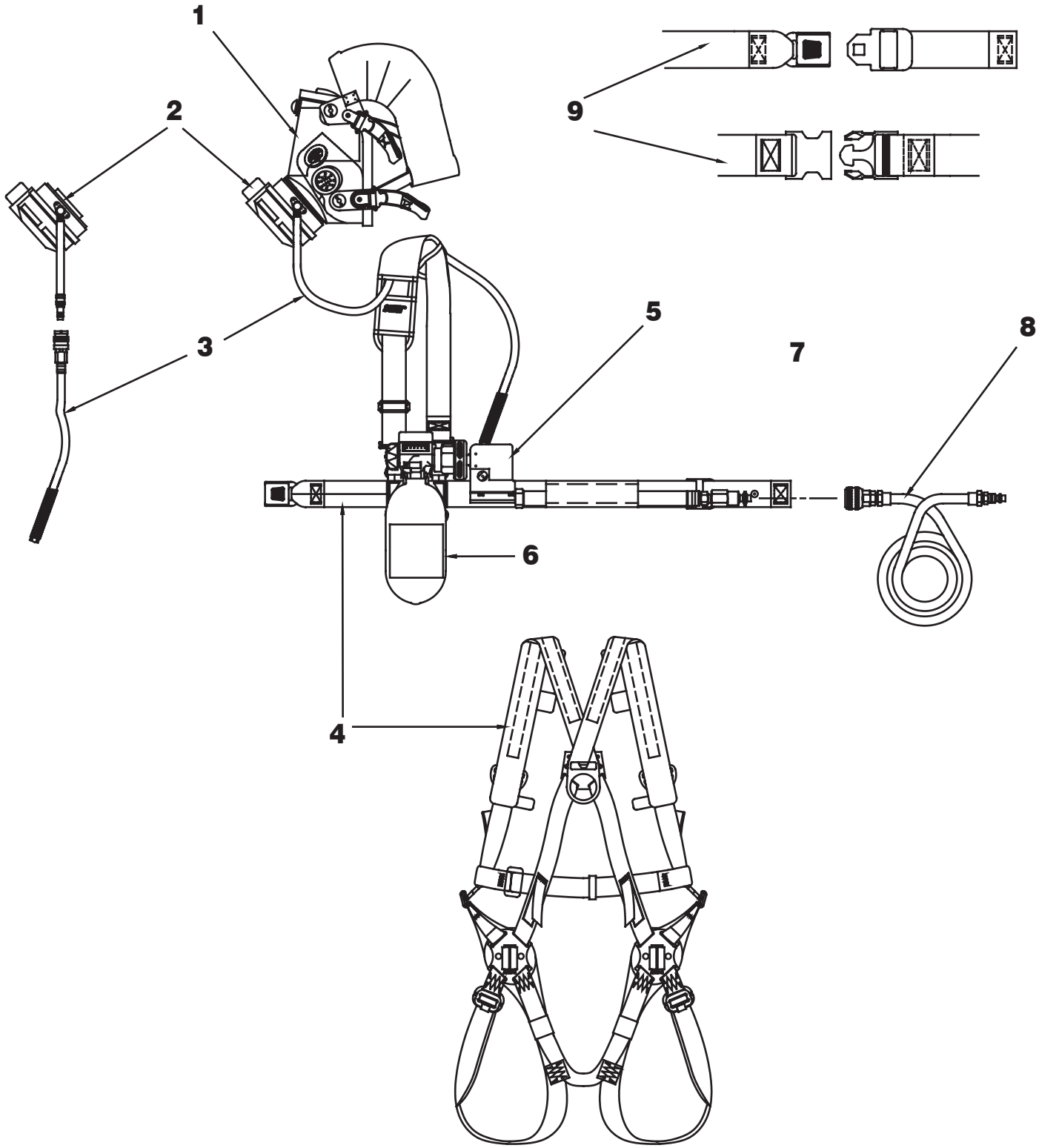
1
2
3
4
5
6
7
8
9

Ska-Pak Plus Respirator Facepiece Part & Accessories

Item Number	Description	Pieces Per Pkg	Part Number	List Price
1	*FACEPIECE*			
1a	AV-3000® Facepiece	See Page50		
1b	AV-2000® Facepiece	See Page 54		
1c	Scott-O-Vista® Facepiece	See Page 58		
2	*REGULATOR*			
2a	E-Z Flo®	1	804221-01	$ 540.00
2b	E-Z Flo with Quick Connect	1	804441-05	$ 355.00
3	Quick Connect Hose Assembly	1	804694-01	$ 119.35
4	*HARNESSES*			
4a	Kevlar®	1	804981-01	$ 235.00
4b	Nylon	1	804982-01	$ 118.00
4c	Fall Protection	1	805061-04	$ 471.00
5	*PRESSURE REDUCERS*			
5a	2216/3000/4500 psig, Entry/Egress	1	804304-01	$ 304.25
5b	2216/3000/4500 psig, Egress Only	1	804310-01	$ 225.20
6	*CYLINDER AND VALVE ASSEMBLIES*			
6a	Aluminum, 5-Minute, 2216 psig	1	805031-01	$ 298.00
6b	Full Wrap Fiberglass, 5-Minute, 3000 psig	1	804988-01	$ 479.00
6c	Full Wrap Fiberglass, 10-Minute, 3000 psig	1	804978-01	$ 541.00
6d	Hoop Wrap Fiberglass, 10-Minute, 4500 psig	1	805032-01	$ 546.00
7	*AIRLINE HOSE AND FITTINGS*			
7a	Airline Hose with Hansen/Foster Fitting	1	804305-01	$ 80.60
7b	Airline Hose with Schrader Fitting	1	804305-02	$ 80.60
7c	Airline Hose with Hansen HK Fitting Plug	1	804305-03	$ 148.30
8	*AIRLINE SUPPLY HOSES*	See Page 32		
9	*WAIST EXTENSION BELTS*			
9a	Kevlar Extension Belt, 1.5 Inches Wide	1	805088-01	$ 23.70
9b	Nylon Extension Belt, 2 Inches Wide	1	805088-02	$ 22.15

NOTE: All full body harnesses (FBH) are size medium unless otherwise specified.

Ska-Pak Plus Respirator Retrofit Kits

Item Number	Description	Part Number	List Price
1	Nylon Harness Retrofit Kit	805185-01	$ 139.00
2	Kevlar® Harness Retrofit Kit	805185-02	$ 256.00
3	Full Body Harness Retrofit Kit (medium)	805185-03	$ 467.00

This kit allows for the upgrade of a 5 minute and 10 minute. Ska-Pak equipped with an E-Z Flo Regulator to a Ska-Pak Plus Respirator. This kit includes parts to accommodate the E-Z Klip cylinder attachment.

SKA-PAK®

RESPIRATORS ASSEMBLIES

FastTrax

Select part numbers from this product line are part of the Scott Fast Trax Program. Contact your Regional Manager or Scott Customer Service for more details.

Ska-Pak Respirator With 2216 psig, 5-minute Aluminum Cylinder, Entry/Egress

Part Numbers	Harness	Facepiece	Head Harness	Faceseal Size	Regulator	Hose Fitting	List Price
804230-01	Polypropylene	Scott-O-Vista®	Polyester	Comfort Seal	E-Z Flo®	Hansen	$ 1,194.00
804231-01	Polypropylene	AV-2000®	Kevlar®	Comfort Seal	E-Z Flo	Hansen	$ 1,305.00
804231-02	Polypropylene	AV-2000	Kevlar	Comfort Seal	E-Z Flo	Schrader	$ 1,305.00
804231-03	Polypropylene	AV-2000	Kevlar	Comfort Seal	E-Z Flo	Hansen HK	$ 1,365.00
804231-21	Polypropylene	Facepiece not included, order separately			E-Z Flo	Hansen	$ 1,072.00

Ska-Pak Respirator With 4500 psig, 10-minute Hoop Wrap Fiberglas Cylinder, Entry/Egress

Part Numbers	Harness	Facepiece	Head Harness	Faceseal Size	Regulator	Hose Fitting	List Price
804331-01	Kevlar	AV-2000	Kevlar	Comfort Seal	E-Z Flo	Hansen	$ 1,676.00
804331-02	Kevlar	AV-2000	Kevlar	Comfort Seal	E-Z Flo	Schrader	$ 1,676.00
804331-36	Kevlar	Facepiece not included, order separately			E-Z Flo	Hansen	$ 1,443.00

Ska-Pak Respirator With 3000 psig, 15-minute Hoop-Wrap Fiberglas Cylinder, Entry/Egress

Part Numbers	Harness	Facepiece	Head Harness	Faceseal Size	Regulator	Hose Fitting	List Price
805195-01	Polypropylene	AV-2000®	Kevlar®	Comfort Seal	E-Z Flo®	Hansen	$ 1,417.00
805195-02	Polypropylene	AV-2000	Kevlar	Comfort Seal	E-Z Flo	Schrader	$ 1,417.00
805195-27	Polypropylene	Facepiece not included, order separately			E-Z Flo	Hansen	$ 1,186.00

Ska-Pak Respirator Facepiece Part & Accessories

Item Number	Description	Pieces Per Pkg	Part Number	List Price
1	*FACEPIECE*			
1a	AV-3000® Facepiece	See Page50		
1b	AV-2000® Facepiece	See Page 54		
1c	Scott-O-Vista® Facepiece	See Page 58		
2	E-Z Flo® Regulator	1	804221-01	$ 540.00
3	*HARNESSES*			
3a	Polypropylene	1	802200-01	$ 134.25
3b	Kevlar®	1	804307-01	$ 300.15
4	*PRESSURE REDUCERS*			
4a	2216/3000/4500 psig, Entry/Egress	1	804304-01	$ 304.25
4b	2216/3000/4500 psig, Egress Only	1	804310-01	$ 225.20
5	*CYLINDER AND VALVE ASSEMBLIES*			
5a	Aluminum, 5-Minute, 2216 psig	1	801935-03	$ 343.40
5b	Hoop Wrap Fiberglass, 10-Minute, 4500 psig	1	804281-01	$ 520.15
5c	Hoop Wrap Fiberglass, 15-Minute, 3000 psig	1	804961-01	$ 442.15
6	*AIRLINE HOSE AND FITTINGS*			
6a	Airline Hose with Hansen Fitting	1	804305-01	$ 80.60
6b	Airline Hose with Schrader Fitting	1	804305-02	$ 80.60
6c	Airline Hose with Hansen HK Fitting Plug	1	804305-03	$ 148.30
6d	Airline Hose with Cejn Fitting	1	804305-07	$ 140.10
7	*AIRLINE SUPPLY HOSES*	See Page 32		

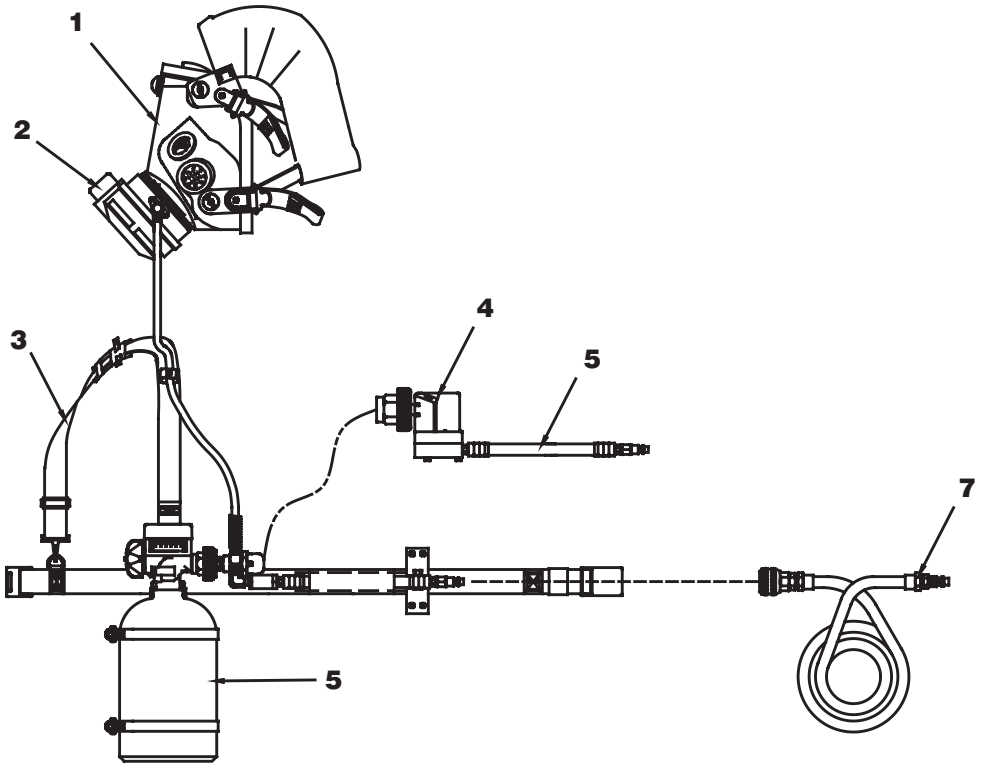

E-Z AIRLINE™

RESPIRATOR ASSEMBLIES

Select part numbers from this product line are part of the Scott Fast Trax Program. Contact your Regional Manager or Scott Customer Service for more details.

E-Z Airline with Modulair™ QuickConnect

Part Numbers	Harness	Facepiece	Head Harness	Faceseal Size	Regulator	Hose Fitting	List Price
804386-19	Nylon	AV-2000®	Polyester	Comfort Seal™	E-Z Flo® w/Modulair	Hansen	$ 658.00
804386-25	Nylon	AV-2000	Polyester	Comfort Seal	E-Z Flo w/Modulair	Schrader	$ 658.00
804386-31	Nylon	AV-2000	Polyester	Comfort Seal	E-Z Flo w/Modulair	Hansen HK	$ 720.00
804386-66	Nylon	Facepiece not included, order separately			E-Z Flo w/Modulair	Hansen	$ 473.00
804386-62	Nylon	Facepiece not included, order separately			E-Z Flo w/Modulair	Schrader	$ 473.00

E-Z Airline™ Respirator Facepiece Part & Accessories

Item Number	Description	Pieces Per Pkg	Part Number	List Price
1	*FULL FACEPIECES*			
1a	AV-3000™ Facepiece	See Page50		
1b	AV-2000® Facepiece	See Page 54		
1c	Scott-O-Vista® Facepiece	See Page 58		
2	Body harness	1	804493-01	$ 113.00
3	E-Z Flo® Regulator with Modulair™ Quick Connect Fitting	1	804441-05	$ 355.00
4	*REGULATOR HOSE ASSEMBLIES*			
4c	Hose Assembly, Schrader	1	804694-03	$ 119.00
4d	Hose Assembly, Hansen	1	804694-04	$ 119.00
4e	Hose Assembly, Hansen HK Plug	1	804694-02	$ 193.00

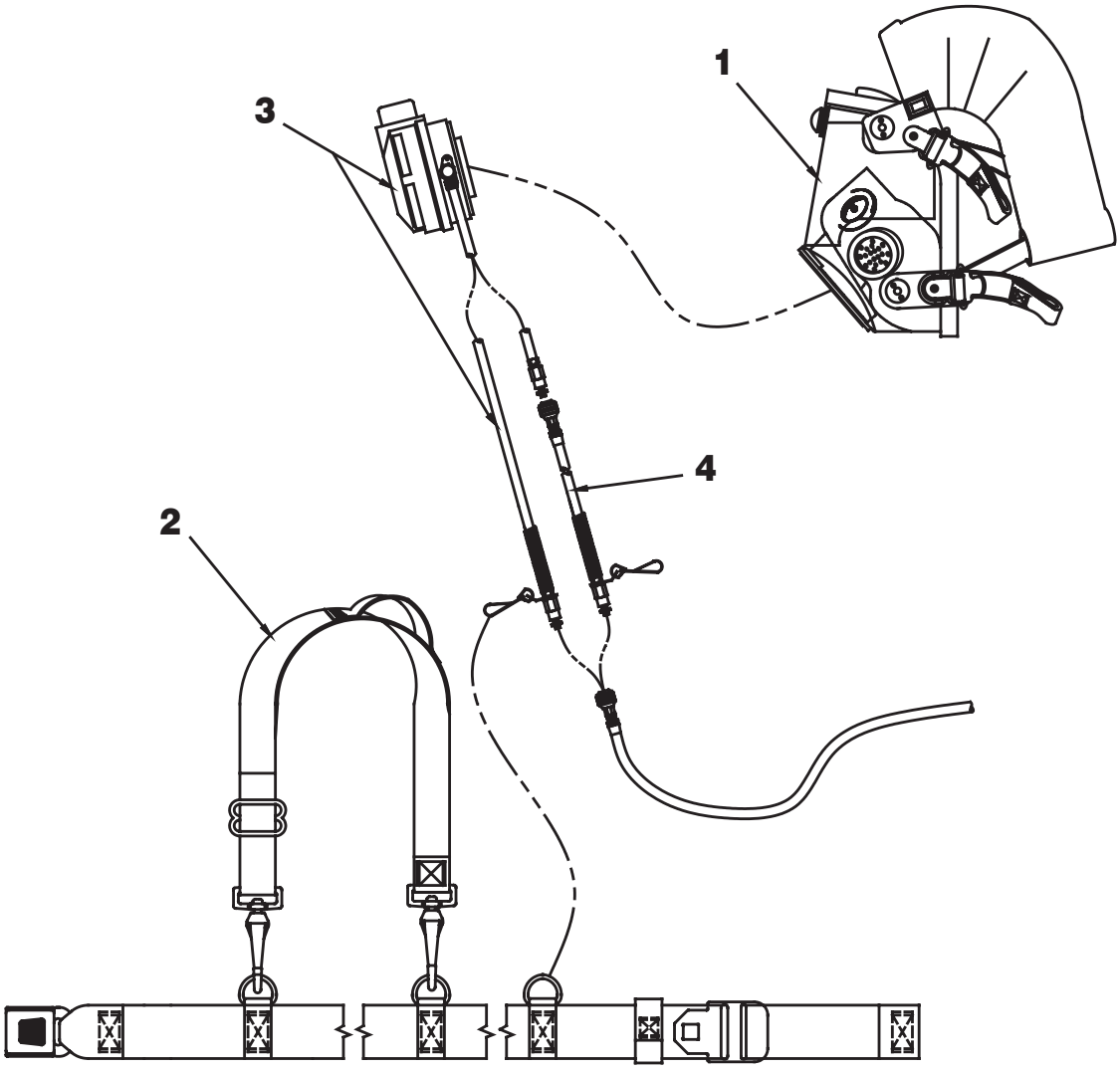

Supply Hose Assemblies

Part Number	Description	Pieces Per Pkg	List Price
26369-006	Hansen HK, 6 Ft	1	$ 170.00
26369-010	Hansen HK, 10 Ft	1	$ 172.00
26369-025	Hansen HK, 25 Ft	1	$ 259.00
26369-050	Hansen HK, 50 Ft	1	$ 316.00
26369-100	Hansen HK, 100 Ft	1	$ 404.00
26370-006	Foster, 6 Ft	1	$ 87.00
26370-010	Foster, 10 Ft	1	$ 105.00
26370-025	Foster, 25 Ft	1	$ 139.00
26370-050	Foster, 50 Ft	1	$ 203.00
26370-100	Foster, 100 Ft	1	$ 319.00
26370-150	Foster, 150 Ft	1	$ 426.00
30010-006	Hansen, 6 Ft	1	$ 87.00
30010-010	Hansen, 10 Ft	1	$ 105.85
30010-025	Hansen, 25 Ft	1	$ 139.00
30010-050	Hansen, 50 Ft	1	$ 203.00
30010-100	Hansen, 100 Ft	1	$ 319.00
30010-150	Hansen, 150 Ft	1	$ 426.00
30010-300	Hansen, 300 Ft	1	$ 726.00
30020-006	Schrader, 6 Ft	1	$ 87.00
30020-010	Schrader, 10 Ft	1	$ 105.00
30020-025	Schrader, 25 Ft	1	$ 139.00
30020-050	Schrader, 50 Ft	1	$ 203.00
30020-100	Schrader, 100 Ft	1	$ 319.00
30020-150	Schrader, 150 Ft	1	$ 426.00
805659-006	Cejn, 6 Ft	1	$ 105.00
805659-025	Cejn, 25 Ft	1	$ 166.00
805659-100	Cejn, 100 Ft	1	$ 332.00

Supply Hose Parts and Accessories

Part Number	Description	Pieces Per Pkg	List Price
10008005	Hansen HK Socket	1	$ 76.15
14492-01	Hansen HK Plug Assembly	1	$ 61.90
10008033	Hansen HK Fitting	1	$ 17.30
10008235	Foster Socket and Hose Fitting	1	$ 57.80
10008234	Foster Plug and Hose Fitting Assembly	1	$ 40.00
13435-00	Hansen Socket and Hose Clamp Assembly	1	$ 57.00
13436-00	Hansen Plug and Hose Fitting Assembly	1	$ 21.00
40389-00	Schrader Socket and Hose Clamp Assembly	1	$ 89.20
15435-00	Schrader Plug and Hose Clamp Assembly	1	$ 38.05
10011747	Cejn Socket	1	$ 57.15
10011748	Cejn Plug Assembly	1	$ 77.35

Pass-Thru Assemblies•

Part Number	Description	Pieces Per Pkg	List Price
803620-01	Pass-Thru Assembly, Hansen Fitting	1	$ 106.55
803620-02	Pass-Thru Assembly, Schrader Fitting	1	$ 106.55

* Pass-thru devices are manufactured for use in protective chemical suits, e.g. Level A and Level B. NIOSH approvals for pass-thru devices in chemical suits are carried by the chemical suit manufacturer.

RIT-PAK™ II

AIR SOURCE KIT

Rit-Pak II with Carrying Case

Part Number	Hose Length	Fitting #1	Fitting #2	RIC/UAC Length	Case	List Price
200223-01	6'	6" EBSS	Schrader	5'	Yes	$ 1,730.20
200223-02	6'	6" EBSS	Schrader	10'	Yes	$ 1,748.55
200223-03	6'	6" EBSS	Schrader	25'	Yes	$ 1,896.50
200223-04	20'	6" EBSS	Schrader	5'	Yes	$ 1,798.20
200223-05	20'	6" EBSS	Schrader	10'	Yes	$ 1,817.65
200223-06	20'	6" EBSS	Schrader	25'	Yes	$ 1,965.60

Rit-Pak II with Carrying Frame (no case)

Part Number						List Price
200224-01	6'	6" EBSS	Schrader	5'	No	$ 1,454.80
200224-02	6'	6" EBSS	Schrader	10'	No	$ 1,474.20
200224-03	6'	6" EBSS	Schrader	25'	No	$ 1,622.20
200224-04	20'	6" EBSS	Schrader	5'	No	$ 1,526.05
200224-05	20'	6" EBSS	Schrader	10'	No	$ 1,545.50
200224-06	20'	6" EBSS	Schrader	25'	No	$ 1,693.45

RIT-PAK Accessories

Part Number		List Price
31000779	RIT-PAK Soft Case	$ 532.70

CARRI-AIR™

AIR SUPPLY ASSEMBLIES

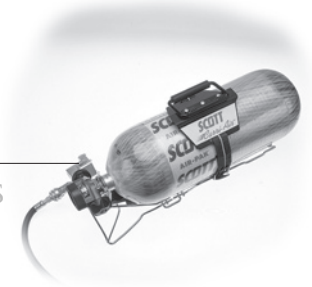

Carri-Air Portable Air Supply Assemblies (Less Cylinder)

Part Number	Description	Pieces Per Pkg	List Price
804911-01	Carri-Air Portable Air Supply With Hansen Fitting	1	$ 395.00
804911-02	Carri-Air Portable Air Supply With Schrader Fitting	1	$ 395.00
804911-03	Carri-Air Portable Air Supply With Hansen HK Fitting	1	$ 450.00

Carri-Air Portable Air Supply With Low Air Alarm

Part Number	Description	Pieces Per Pkg	List Price
804911-05	4500 psig Reducer With Hansen Connection	1	$ 877.00
804911-06	4500 psig Reducer With Schrader Connection	1	$ 877.00

Carri-Air Portable Air Supply

Part Number	Description	Pieces Per Pkg	List Price
804722-01	Carbon Cylinder and Valve Assembly, 4500 psig, 45-Minute	1	$ 1,230.00
804723-01	Carbon Cylinder and Valve Assembly, 4500 psig, 60-Minute	1	$ 1,382.00

MOBILE AIR CART

AIR SUPPLY

Part Number	Description	Pieces Per Pkg	List Price
805825-01	Mobile Air Cart, 2 Outlet, Hansen, Aux. Inlet, Less Cylinders	1	$,2091.00
805825-04	Mobile Air Cart, 2 Outlet, Schrader, Aux. Inlet, Less Cylinders	1	$ 2,091.00
805825-07	Mobile Air Cart, 2 Outlet, Foster, Aux. Inlet, Less Cylinders	1	$ 2,143.00
805826-01	Mobile Air Cart, 4 Outlet, Hansen, Aux. Inlet, Less Cylinders	1	$ 2,201.00
805826-04	Mobile Air Cart, 4 Outlet, Schrader Aux. Inlet, Less Cylinders	1	$ 2,201.00
805826-07	Mobile Air Cart, 4 Outlet, Foster, Aux. Inlet, Less Cylinders	1	$ 2,201.00
805827-01	Mobile Air Cart, 4 Outlet, 2 Tool, Hansen, Aux. Inlet, less Cylinders	1	$ 2,546.00
805827-04	Mobile Air Cart, 4 Outlet, 2 Tool, Schrader, Aux. Inlet, Less Cylinders	1	$ 2,546.00
805827-07	Mobile Air Cart, 4 Outlet, 2 Tool, Foster, Aux. Inlet, less cylinders	1	$ 2,546.00
804723-01	Carbon 4500 psig, 60 Min. Cylinder and Valve Assembly	1	$ 1,382.00
804101-01	Aluminum, 2216 psig, 30 Min. Cylinder and Valve Assembly	1	$ 526.00

TRC-1

AIR CART

TRC-1 AIR CART (Less Cylinders)

Part Number	Description	Pieces Per Pkg	List Price
200070-01	TRC-1 Air Cart, 8 Outlet, Aux. Inlet, Hansen	1	$ 4,959.00

ELSA®

ESCAPE RESPIRATOR ASSEMBLIES

FastTrax

Select part numbers from this product line are part of the Scott Fast Trax Program. Contact your Regional Manager or Scott Customer Service for more details.

ELSA® Emergency Escape Breathing Device

Part Number	Description	List Price
2009164	ELSA 5-Minute Emergency Escape Breathing Device	$ 409.00
2009165	ELSA 10-Minute Emergency Escape Breathing Device	$ 498.00
2009166	ELSA 5-Minute High Flow Emergency Escape Breathing Device	$ 503.00
2014226	ELSA 15-Minute Emergency Escape Breathing Device	$ 546.00

ELSA Parts and Accessories

Part Number	Description	List Price
2010880	Replacement Hood	$ 79.00
2010884	Replacement Bag, 5-Minute Unit	$ 61.00
2010885	Replacement Bag, 10-Minute Unit	$ 61.00
2010887	Replacement Bag, 5-Minute High Flow Unit	$ 61.00
2010881	Reducer Assembly, 5-Minute Unit	$ 281.00
2010882	Reducer Assembly, 10-Minute and 15-Minute Unit	$ 281.00
2010883	Reducer Assembly, 5-Minute High Flow Unit	$ 281.00
2010173	Anti-Fog Coating	$ 7.00

SCRAM®

EMERGENCY ESCAPE BREATHING DEVICE

SCRAM® Oxygen Self Generating Escape Device

Part Number	Description	Pieces Per Pkg	List Price
802300-02	SCRAM Emergency Escape Breathing Device	1	$ 597.00
802390-04	SCRAM Training Unit	1	$ 600.00

PAK-TRACKER™

FIREFIGHTER LOCATOR

Pak-Tracker Firefighter Locator

Part Number	Description	List Price
200266-02	Pak- Tracker Hand-Held Receiver Kit	$ 1,249.00
200267-01	Pak-Tracker Firefighter Locator Personal Transmitter Kit	$ 275.00
200682-01	Pak-Tracker Firefighter Locator Integrated Upgrade Kit* (Sensor module, cables, less console)	$ 756.00
805796-03	Pak-Tracker Firefighter Locator (Field Install Kit)*	$ 890.00
805796-04	Pak-Tracker Firefighter Locator (Factory Installed)*	$ 905.00

* For Air-Pak 2.2/3.0/4.5/ Fifty SCBA

Accessories of Pak-Tracker Firefighter Locator

Part Number	Description	List Price
200402-01	Pak-Tracker Hand-Held Receiver NiMH Rechargeable Battery	$ 75.00
200433-01	Pak-Tracker Hand-Held Receiver Truck Charging System, 12V DC	$ 395.00
200433-02	Pak-Tracker Hand-Held Receiver Truck Charging System, 110V AC	$ 395.00
200434-01	Pak-Tracker Hand-Held Receiver Desktop Charging System, 110V AC	$ 375.00
40014453	Pak-Tracker Hand-Held Receiver Neck Strap	$ 43.20
200431-01	Pak-Tracker Personal Transmitter Battery Door & Clip Assembly	$ 32.40
200411-01	Pak-Tracker Personal Transmitter Lanyard	$ 21.60

SEMS™

SCOTT ELECTRONIC MANAGEMENT SYSTEM

SEMS for Air-Pak® 2.2/3.0/4.5/Fifty™ SCBA

Part Number	Description	List Price
805898-01	SEMS, 2216 (Field Install Kit)	$ 2,153.00
805898-02	SEMS, 3000 (Field Install Kit)	$ 2,153.00
805898-03	SEMS, 4500 (Field Install Kit))	$ 2,153.00
805898-04	SEMS, 2216 (Factory Installed)	$ 2,196.00
805898-05	SEMS, 3000 (Factory Installed)	$ 2,196.00
805898-06	SEMS, 4500 (Factory Installed)	$ 2,196.00

Accessories for SEMS

Part Number	Description	List Price
805679-01	SEMS Base Station	$ 4,568.00
200160-01	SEMS Programming Kit (Included in 805679-01)	$ 345.00

PAK-ALERT® SE+

PERSONAL ALERT SAFETY SYSTEMS

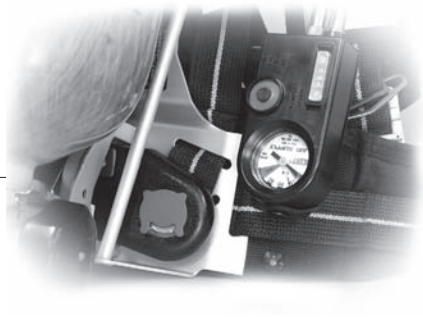

Pak-Alert SE+ for Air-Pak® 2.2/3.0/4.5/ Fifty™ SCBA

Part Number	Description	List Price
805796-01	Pak-Alert SE+ Pass Device (Field Install Kit)	$ 752.00
805796-02	Pak-Alert SE+ Pass Device (Factory Installed)	$ 767.00

EAGLE X™

THERMAL IMAGING CAMERA

Eagle X Thermal Imaging Camera (Camera only with attached battery)

Note: When ordering, please specify on your purchase order the part number of Eagle X camera, plus the part number of case or truck charging system desired.

Part Number	Camera (No options)	Digital --F	Digital --C	List Price
Yellow Housing				
200353-01	●			$ 8,995.00
200353-03		●		$ 9,395.00
200353-05			●	$ 9,395.00
Black Housing				
200353-06	●			$ 8,995.00
200353-08		●		$ 9,395.00
200353-10			●	$ 9,395.00

Eagle X Thermal Imaging Camera (Spare and Replacement Parts, Case & Accessories)

Part Number	Description	List Price
200241-01	Carrying case assembly (includes the case and the accessory parts listed below, as well as operation & maintenance instructions in printed and CD formats.)	$ 600.00
31000565	Spare NiMH battery	$ 75.00
200243-01	Charger cradle and AC adapter	$ 270.00
40014635	DC adapter	$ 25.00
200213-01	AA battery loader	$ 15.00
40014453	Neck/shoulder strap	$ 43.20
31000687	Carrying case only	$ 250.00
31000366	AC adapter	$ 48.60
200233-01	Germanium lens replacement kit	$ 320.00

Eagle X Thermal Imaging Camera (Truck Charging System (TCS) & Accessories)

Part Number	Description	List Price
200249-01	TCS assembly with DC adapter (includes the accessory parts listed below)	$ 450.00
200249-02	TCS assembly with AC adapter (includes the accessory parts listed below)	$ 450.00
31000565	Spare NiMH battery	$ 75.00
200213-01	AA battery loader	$ 15.00
40014453	Neck/shoulder strap	$ 43.20

EAGLE IMAGER® 160

THERMAL IMAGING CAMERA

Eagle Imager 160 (Camera only with attached battery)

Note: When ordering from the CAMERA ONLY listing, please specify the part number of the Eagle Imager 160 Camera, plus the part number of the case or truck charging system desired.

	Radiometry						
Part Number	Bar Scale -- F	Bar Scale -- C	Digital -- F	Digital -- C	Transmitter	Color Pallete	List Price
200155-103	●						$ 10,545.00
200155-104	●				●		$ 11,445.00
200155-107			●				$ 10,545.00
200155-109				●			$ 10,545.00
200155-117			●		●	●	$ 11,500.00
200155-118	●				●	●	$ 11,945.00
200155-119		●			●	●	$ 11,945.00

Radiometry temperture readouts available in either Fahrenheit (F) or Celsius (C) degrees.

Eagle Imager 160 (Camera with case and accessories)

	Radiometry						
Part Number	Bar Scale -- F	Bar Scale -- C	Digital -- F	Digital -- C	Transmitter	Color Pallete	List Price
200155-03	●						$ 11,300.00
200155-04	●				●		$ 12,200.00
200155-07			●				$ 11,300.00
200155-08			●		●		$ 12,200.00
200155-09				●			$ 11,300.00
200155-16				●	●	●	$ 12,700.00
200155-17			●		●	●	$ 12,700.00
200155-18	●				●	●	$ 12,700.00
200155-19		●			●	●	$ 12,700.00

Radiometry temperature readouts available in either Fahrenheit (F) or Celsius (C) degrees. Color cameras feature both full-color and gray scale displays.

EAGLE IMAGER® 160

ACCESSORIES & TRUCK CHARGING SYSTEM

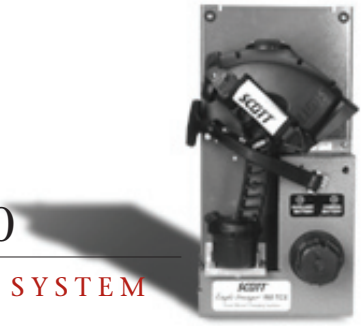

Eagle 160 Thermal Imaging Camera (Spare and Replacement Parts, Case & Accessories)

Part Number	Description	List Price
200199-01	Case & Accessories (includes parts listed below)	$ 755.00
200158-01	Spare NiMH battery	$ 125.00
40014453	Neck/shoulder strap	$ 43.20
31000283	Charging cradle	$ 280.80
31000366	AC adapter	$ 48.60
31000367	DC adapter	$ 88.60
200159-01	Side hand strap assembly (1)	$ 30.00
40014585	Reflective hand strap pad (1)	$ 16.00
40014679	Germanium lens cover	$ 320.00
31000219	Front rubber bumper	$ 16.20
31000296	Rubber boot ring	$ 13.00
31000348	Carrying case only (no accessories)	$ 205.20

Eagle 160 Thermal Imaging Camera (Truck Charging System (TCS) & Accessories)

Part Number	Description	List Price
200235-01	TCS assembly with 12 volt DC connector (includes the accessory parts listed below)	$ 670.00
200235-02	TCS assembly with 110 volt AC connector (includes the accessory parts listed below)	$ 670.00
40015093	Mounting kit for TCS	$ 22.00
40014453	Camera neck/shoulder strap	$ 43.20
200158-01	Spare battery	$ 125.00

Video Receiver Assembly

Part Number	Description	List Price
40014832	***2- channel receiver assembly w/dish mount antenna (includes parts below)***	***$ 2,065.00***
40014667	2 Channel Video Receiver	$ 1,400.00
40014825	Tripod	$ 100.00
40014826	12-Volt DC Adapter	$ 20.00
40014827	12-ft. Cigarette Cord	$ 46.00
40014828	Video Cable Assembly	$ 35.00
40014833	Video Receiver Carrying Case	$ 125.00
40014835	Cable Assembly, Antenna	$ 80.00
40014862	Receiver Antenna Assembly	$ 280.00
40014980	***2-channel receiver assembly w/magnetic mount antenna (includes parts below)***	***$ 1,728.00***
40014667	2 Channel Video Receiver	$ 1,400.00
40014826	12-Volt AC Adapter	$ 20.00
40014827	12-ft. Cigarette Cord	$ 46.00
40014828	Video Cable Assembly	$ 35.00
40014973	Mobile Antenna Assembly	$ 150.00

Extended Warranty Protection for Eagle X® and Eagle Imager® 160 Camera

Part Number	Description	List Price
camerawar61	1 year extended warranty*	$ 990.00
camerawar62	2 year extended warranty*	$ 1,980.00

** Cameras are sold with an automatic one-year warranty at no charge. Extended warranties must be ordered at time of camera purchase.*

See Radio Identification Table, page 47-49, for description of radio connectors.
Consult factory to determine availability of connectors not listed.
EPIC Brackets can be used on all Scott communications systems and must be ordered separately

E-Z RADIOCOM™ II

COMMUNICATIONS

E-Z Radiocom II Communications Device

Part Number	List Price
200119-102	$ 1,030.00
200119-103	$ 1,030.00
200119-104	$ 1,070.00
200119-117	$ 920.00
200119-121	$ 1,140.00
200119-128	$ 820.00
200119-134	$ 960.00
200119-149	$ 880.00
200119-168	$ 970.00
200119-169	$ 1,000.00
200119-171	$ 1,040.00
200119-178	$ 990.00
200119-192	$ 980.00

Miscellaneous Parts

200119-01	Facepiece Voice Amplifier & Speaker Boom Only	$ 600.00
200126-XX	E-Z Radiocom II extension (portion of system with PTT and radio connector; consult factory)	Consult factory
31000374	Optional switch guard for PTT	$ 25.00

E-Z RADIOCOM™ I

COMMUNICATIONS

E-Z Radiocom II Communications Device

Part Number	List Price
805206-02	$ 720.00
805206-03	$ 720.00
805206-04	$ 740.00
805206-11	$ 820.00
805206-17	$ 720.00
805206-32	$ 550.00
805206-68	$ 655.00
805206-77	$ 840.00

See Radio Identification Table, page 47-49, for description of radio connectors.
Consult factory to determine availability of connectors not listed.
EPIC Brackets can be used on all Scott communications systems and must be ordered separately

TALK-AROUND™

COMMUNICATIONS

Talk-Around Facepiece Mounted Radio

Part Number	List Price
804827-01	$ 990.00

Talk-Around Radio Cable Interface

Part Number	List Price
805435-02	$ 400.00
805435-04	$ 380.00
805435-34	$ 360.00
805435-68	$ 360.00

HAZMAT RADIOCOM™

COMMUNICATIONS

HAZMAT Radiocom Device, Paddle PTT

Part Number	List Price
805701-02	$ 665.00
805701-03	$ 605.00
805701-04	$ 635.00
805701-11	$ 1,005.00
805701-17	$ 600.00
805701-34	$ 600.00
805701-68	$ 655.00
805701-75	$ 610.00
805701-77	$ 830.00

HAZMAT Radiocom Device, Ring Finger PTT

Part Number	List Price
805702-04	$ 660.00
805702-68	$ 640.00
805702-77	$ 800.00

See Radio Identification Table, page 47-49, for description of radio connectors.
Consult factory to determine availability of connectors not listed.
EPIC Brackets can be used on all Scott communications systems and must be ordered separately

CON-SPACE LINK®

COMMUNICATIONS

Con-Space Link® Communications System

Part Number		List Price
805107-01	Con-Space Facepiece Communications Device*	$ 455.00

** Balance of system for Con-Space CSI-1000, CSI-2000 or Rescue Hardline Communications System must be ordered directly from Con-Space Ltd. (Tel. 800-546-3405).*

EPIC™ VOICE AMPLIFIER

COMMUNICATIONS

EPIC™ Voice Amplifier

Part Number		List Price
200260-01	Voice amplifier assembly	$ 380.00
31001087	Voice amplifier battery door assembly replacement	$ 28.00
31001088	Voice amplifier mask sealing gasket (kit of 5)	$ 25.00
31001089	Voice amplifier bayonet locking lever replacement (kit of 5)	$ 25.00
31001550	Voice amplifier battery door latch screws (kit of 20)	$ 25.00

EPIC™ BRACKET

COMMUNICATIONS

EPIC Facepiece Bracket

Part Number		List Price
200715-01	AV-3000™ Facepiece	$ 22.50
200716-01	AV-2000® Facepiece	$ 22.50

Can be used with all Scott communications systems

COMMUNICATIONS

KEY FOR IDENTIFYING CONNECTORS FOR 2-WAY RADIOS

Radio Identification Table

Radio Brand	Radio Model	All Scott communications systems except E-Z Radiocom II	E-Z Radiocom II Only
Motorola	MX300/310/320/340/350/360	-01	-101
Motorola	HT600, 800, 810, 820 ; MT1000; P200;MTX800/ 900;/ 900S, MTX800, MTX810,MTX820, MTX900	-02	-102
Motorola	RADIUS GP300/ P1225; GTX; GTX8250; P110; SPIRIT-111, AP-73 (ASIAN RADIO), GP-88 (ASIAN RADIO), LTS 2000,GP63, GP68, PRO3150,PRO2150,CT150,CT250,CT250LS,CT450, CT450LS, MTX638 (ASIA & AUSTRALIA) GP-308,GP2000, CP200, CP150, PR400, Radius CP150, Commander 245	-03	-103
Motorola	HT1000; JT1000; MT2000 MTX838; MTS2000; MTX2000/8000/9000 Transcrypt Stealth, MTX, GP900, XTS1500,XTS2500,XTS3000,XTS3000R,XTS3500,XTS5000, PTX1200 , PTX3600, MT1500	-04	-104
GE Ericsson (Macom)	MPA; MPD; MTL; TPX; GF (PACUDX)	-05	-105
Motorola	HT50/90/440; P100	-06	-106
Motorola	VISAR	-07	-107
Motorola	EXPO; P10/50; HT10	-08	-108
Motorola	SABER QD	-09	-109
Motorola	MX800; MX840, STX Series	-10	-110
GE Ericsson (Macom)	MRK, PRISM, LPE-200, Erricsson PK1ZGT, LPE50, PK2HTX	-11	-111
Yaesu-Vertex	FT76	-12	-112
GE Ericsson (Macom)	PCS	-13	-113
Standard	HX-381/482/580T/581T/582T/585T/587T	-16	-116
Kenwood	TK-208/220/240/248/250/260/270/272/308/320/340/ 350/353/360/370/372/373G/430/2160/3160;TH-21/25A/41/45/75/ 91A/2102/3102; DEMITOSS 9 (JAPAN),FREETALK LINE, TK2100K2/ TK3101K, TK2200,TK3200,TK2202, TK-3170, TK-3173, TK 3202	-17	-117
Bendix-King	LPH; LPI; LPU; LPX; EPH; EPU; MPH; EPV:EPI; GPH; DPH	-18	-118
E.F. Johnson	LX2442/2443; FM5852; ZX2452/2453, 5850, 5855, 5860, 5861, 5862	-19	-119
E.F. Johnson	VIKING CL 8560/8565/8561/8566/8570/8571/5870/5876/ 5877/85 91/8587/8585/8586/8588/ CH-HM91	-21	-121
GE Ericsson (Macom)	Monogram, 344A4209P83	-22	-122
GE Ericsson (Macom)	KPC, 500P	-25	-125
GE Ericsson (Macom)	MPI; PLS	-26	-126

Radio Identification Table

Radio Brand	Radio Model	All Scott communications systems except E-Z Radiocom II	E-Z Radiocom II Only
GE Ericsson (Macom)	MPR; MPS; MPX	-27	-127
Icom	IC-2A/AT/E; ICH-2/6/12/16; ICU-2/6/12/16, IC-F11, IC-F11S, IC-F21, IC-F21S,IC-F21BR	-28	-128
Icom	ICH-18/19; ICU-18/19	-29	-129
Icom	Top load IC-F10/20, IC-F3,IC-F4,IC-F3S,IC-F4S, IC-F4S-4	-30	-130
Icom	IC-F30/40/30LT/40LT	-31	-131
Kenwood	TK200/210/310	-32	-132
Kenwood	TK230/330	-33	-133
Kenwood	TK 190/280/380/290/390/480/481/2140/2170/3140/290K/2180/3 180/TK-385	-34	-134
Maxon	SP2000 Series ,SP-2550 SP-2850; SL70W	-35	-135
Maxon	SP5000 Series CP-0500 Series	-36	-136
Maxon	PC-50;SP100; SP120; SP130;SP140, SP55, HP125/425, SL55	-37	-137
Midland	70-148B/248B	-38	-138
Midland	70-153	-39	-139
Midland	70-165/166/265/266	-40	-140
Midland	70-145/148/154/245/254	-41	-141
Midland	70-043/143/143B/243	-42	-142
Midland	70-115/150	-43	-143
Midland	70-195/295	-44	-144
Midland	70-155/255	-45	-145
Motorola	MT500	-46	-146
Motorola	Spirit-Pro, MU21CV,MU21CZ,SU21C,XTN Series, XTV2100,XTN446, CLS Series, XV1100, XZ1100, AXV5100	-47	-147
Motorola	GP350 QD	-49	-149
Relm/SmartCom	MPS; MPV08, MPU08B, WHS150, MPV32, MPU32, Minicom 3200, SCV32	-50	-150
Ritron/Jobcom	JBX151; RTX-050; JMX100/400 Series; RTX150/450; SST SERIES	-51	-151
Ritron/Jobcom	JBC15M; JBC200	-52	-152
Standard	HX240U/V	-53	-153
Standard	HX300/734L/834L	-54	-154
Standard	HX320	-55	-155
Standard	HX340/341/440	-56	-156
Standard	HX400	-57	-157
Tekk	T20; T40; T50; T60	-58	-158
Uniden	SPH / SPU Series, SPU 454	-59	-159
Uniden	SPS310T/320TS	-60	-160

Radio Identification Table

Radio Brand	Radio Model	All Scott communications systems except E-Z Radiocom II	E-Z Radiocom II Only
Yaesu-Vertex	FT416/816/11R/41R, FTH2005, 2008,2009,7005,7008,7009	-62	-162
Yaesu-Vertex	VX10,VX300, VX400: VXF Series, F10/40/50, FT50R	-63	-163
Yaesu-Vertex	FTH2070	-66	-166
Yaesu-Vertex	VX500, VX510	-67	-167
Motorola	HT750, HT1250, HT1550, HT1550-XLS, PRO 5150,PRO 7150, PRO 7350, PRO 7550, PRO 9150, GP328, GP329, GP338, GP339, GP320, GP340, GP360, GP380, GP680, MTX850, MTX850-LS,MTX8250,MTX8250-LS, MTX950, MTX9250, PTX700, PTX760, PTX780, PRO5101, PRO5150, MTX1500, PR860	-68	-168
Motorola	ASTRO; SABER,MX1000,MX2000,MX3000 (* see note)	-69	-169
GE Ericsson (Macom)	Jaguar, 700P, 700PI, 7100P, P7100 IP, P7170,P7150, HT7170T, HT7150S,HA8VSX	-71	-171
Icom	A3E, A22, A22E	-72	-172
Yaesu-Vertex	VX-600, VX-600UB, VX-600VB, VX-600U, VX-600V, VX-800, VX-900	-75	-175
Standard	HX-350, HX-625A, HX3509	-76	-176
Vertex	VX-160,VX-180,VX-210, VX-210AU, VX-210AV, VX-2R, VX-420, VX-410, VX-414, VX-424, VX-417, VX-427	-77	-177
Motorola	EX500, EX600, GP344, GP388	-78	-178
Relm/SmartCom	RPV516/A, RPV599AT	-79	-179
Tait	Tait Orca 5000 series, 5011, 5021, 5030, 5035, 5040, Elan, Excel, Eclipse	-81	-181
E.F. Johnson	8160, 8150, 8170, 7700 SERIES, Avenger	-87	-187
Midland	70-112B	-85	-185
E.F. Johnson	5100 series-511x,514x,518x,5133	-83	-183
Maxon	SP150	-88	-188
Maxon	PL1145, PL2245, PL5161, PL5164	-89	-189
Icom	Side connector IC-F4GT,IC-F3GS,IC-F3GT,IC-F12S, IC-F22S, IC-F12, IC-F22,IC-F4G-2	-90	-190
Icom	IC-F1103, M88, IC-F50, IC-F60	-91	-191
Motorola	GP350	-92	-192

** Astro Sabre accessories work only on digital Astro Sabre radios.*

Consult factory for availability and pricing if radio model is not shown on Radio Identification Table or if the dash number of the required connector is not represented on list for the specific Scott product desired.

AV-3000®

FACEPIECE

Select part numbers from this product line are part of the Scott Fast Trax Program. Contact your Regional Manager or Scott Customer Service for more details.

AV-3000 Facepiece Facepiece With Polyester Head Harness

Part Number	Description	Pieces Per Pkg	List Price
805774-01	EPDM Rubber Faceseal, Small, Small Nosecup	1	$ 192.00
805774-02	EPDM Rubber Faceseal, Medium, Medium Nosecup	1	$ 192.00
805774-03	EPDM Rubber Faceseal, Large, Large Nosecup	1	$ 192.00

AV-3000 Facepiece With Kevlar® Head Harness

Part Number	Description	Pieces Per Pkg	List Price
805773-01	EPDM Rubber Faceseal, Small, Small Nosecup	1	$ 245.00
805773-02	EPDM Rubber Faceseal, Medium, Medium Nosecup	1	$ 245.00
805773-03	EPDM Rubber Faceseal ,Large, Large Nosecup	1	$ 245.00
805773-71	EPDM Rubber Faceseal, Small, Small Grey Nosecup	1	$ 245.00
805773-72	EPDM Rubber Faceseal, Medium, Medium Grey Nosecup	1	$ 245.00
805773-73	EPDM Rubber Faceseal, Large, Large Grey Nosecup	1	$ 245.00

NOTE: AV-3000 facepieces with a grey nosecup are approved for use with the NFPA 2007 edition Scott Air-Pak® SCBA's

AV-3000 Facepiece With 4-Point Rubber Head Harness

Part Number	Description	Pieces Per Pkg	List Price
805775-01	EPDM Rubber Faceseal, Small, Small Nosecup	1	$ 188.00
805775-02	EPDM Rubber Faceseal, Medium, Medium Nosecup	1	$ 188.00
805775-03	EPDM Rubber Faceseal, Large, Large Nosecup	1	$ 188.00

TOP DOWN CONVERTIBILITY™

The AV-3000 facepiece is fully interchangeable with Scott's full-line of SCBA, air-supplied respirators and air purifying respirators, as well as Scott's communications products providing "Top- Down Convertibility™" options. It is designed to minimize equipment inventories, simplify the complexities of user training when issued as a single personal issue facepiece and reduce redundant facepiece fit tests.

AV-3000 Facepiece Parts and Accessories

Part Number	Description	List Price
805337-11	Facepiece Assembly, Rubber Faceseal, Small	$ 209.55
805337-12	Facepiece Assembly, Rubber Faceseal, Medium	$ 209.55
805337-21	Facepiece Assembly, Rubber Faceseal, Large	$ 209.55
805337-22	Facepiece Assembly, Grey nosecup, Small	$ 209.55
805337-23	Facepiece Assembly, Grey nosecup, Medium	$ 209.55
805337-13	Facepiece Assembly, Grey nosecup, Large	$ 209.55
805787-01	Communication Clamp, Right Side Only	$ 19.50
805787-02	Communication Clamp, Left Side Only	$ 19.50
31000558	AV-3000 NBC Shroud	$ 210.85
200264-01	EPIC™ Communications Clamp, Right Side Only	$ 19.00
200264-02	EPIC Communications Clamp, Left Side Only	$ 19.00

AV-3000 Facepiece Lens Kits Accessories

Part Number	Description	List Price
200372-52F	52mm Facepiece Lens Kits (Frame Only for Prescription)	$ 99.00
200372-60F	60mm Facepiece Lens Kits (Frame Only for Prescription)	$ 99.00
200372-52B	52mm Facepiece Lens Kits (MSL™ - Metallized Surface Lenses [Blue])	$ 155.00
200372-60B	60mm Facepiece Lens Kits (MSL - Metallized Surface Lenses [Blue])	$ 155.00
200372-52S	52mm Facepiece Lens Kits (MSL - Metallized Surface Lenses [Silver])	$ 155.00
200372-60S	60mm Facepiece Lens Kits (MSL - Metallized Surface Lenses [Silver])	$ 155.00
200372-52Y	52mm Facepiece Lens Kits (SmokeSight XT™ [Yellow])	$ 155.00
200372-60Y	60mm Facepiece Lens Kits (SmokeSight XT [Yellow])	$ 155.00
200372-52G	52mm Facepiece Lens Kits (TCR™ - True Color Reception Lenses™ [Grey])	$ 155.00
200372-60G	60mm Facepiece Lens Kits (TCR - True Color Reception Lenses [Grey])	$ 155.00

AV-3000 Facepiece Part & Accessories

Item Number	Description	Pieces Per Pkg	Part Number	List Price
1	*HEAD HARNESSES*			
1a	Kevlar® Head Harness Assembly SM/MED	1	805808-01	$ 134.00
1b	Kevlar Head Harness Assembly LARGE	1	805808-02	$ 134.00
1c	Polyester Head Harness	Standard	805809-01	$ 59.05
1d	Polyester Head Harness	Large	805809-02	$ 59.05
1e	4-Point Rubber Head Harness	1	200177-01	$ 52.10
2	Temple Band Assembly	1	804178-01	$ 18.20
3	Neck Band Assembly	1	804176-01	$ 18.80
4	AV-3000 Facepiece Lens	1	805345-01	$ 96.40
5	Upper Bezel	1	10011024	$ 6.55
6	Lower Bezel	1	10011025	$ 10.50
7	Bezel Screw	1	33335-022	$ 1.60
8	*FACEPIECE SEALS*			
8a	Facepiece Small	1	805771-01	$ 112.25
8b	Facepiece Medium	1	805771-02	$ 112.25
8c	Facepiece Large	1	805771-03	$ 112.25
9	Nosecup Retaining Ring	1	10011015	$ 4.65
10	Voicemitter	1	803759-01	$ 14.85
11	Left Voicemitter Duct	1	10011027	$ 5.05
12	Right Voicemitter Duct	1	10011026	$ 5.05
13	*NOSECUP*			
13a	Nosecup Small	1	10011011	$ 31.20
13b	Nosecup Medium	1	10011012	$ 31.20
13c	Nosecup Large	1	10011013	$ 31.20
13d	Nosecup X-Large	1	10012218	$ 31.20
13aa	Nosecup Grey Small	1	31001043	$ 31.20
13bb	Nosecup Grey Medium	1	31001044	$ 31.20
13cc	Nosecup Grey Large	1	31001045	$ 31.20
14	Inhalation Check Valve Disk	1	10011014	$ 2.55

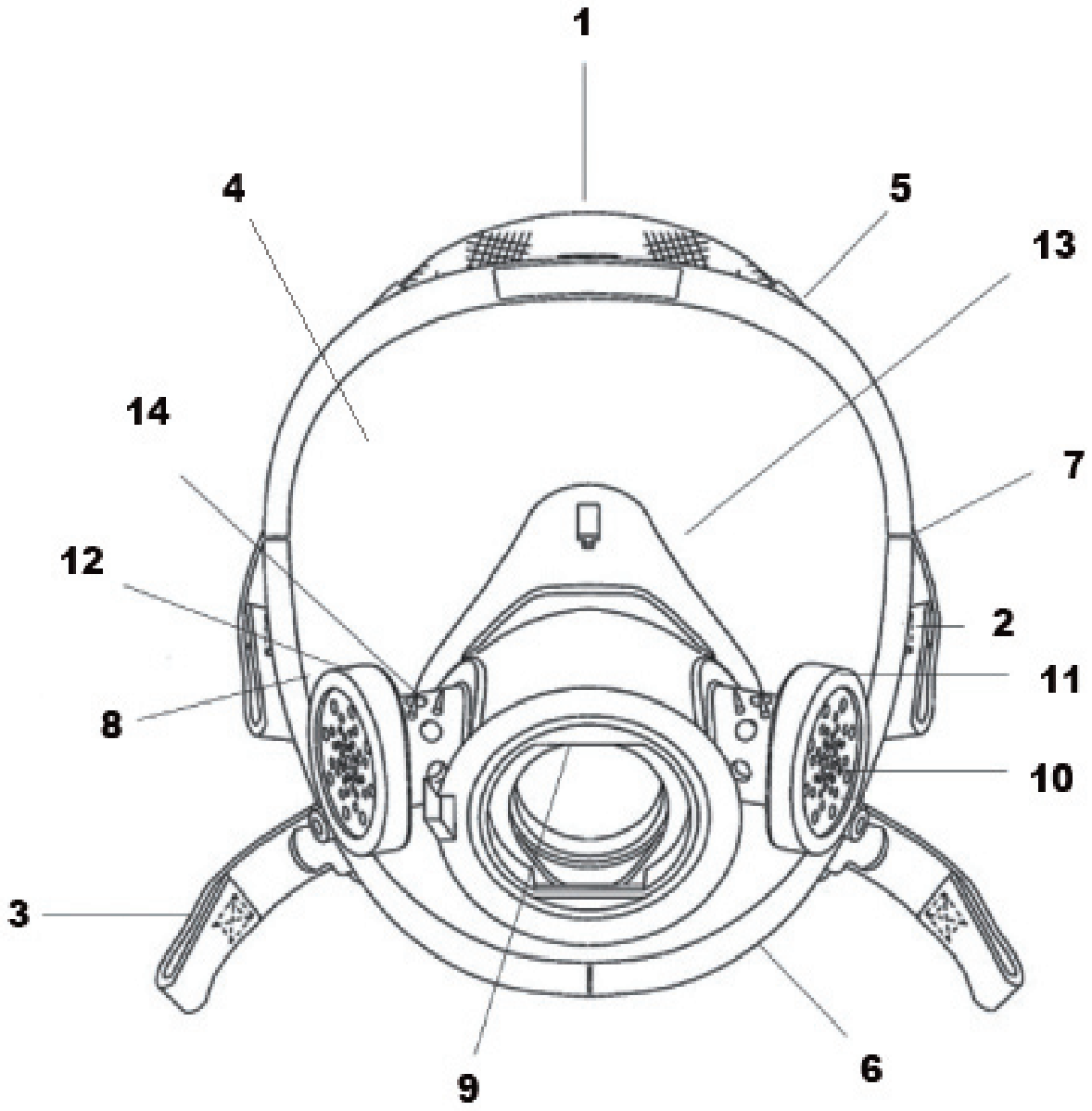
1
4
5
13
14
7
12
2
11
8
10
3
9
6

AV-2000®

FACEPIECE

Select part numbers from this product line are part of the Scott Fast Trax Program. Contact your Regional Manager or Scott Customer Service for more details.

AV-2000 Facepiece with Polyester Head Harness

Part Number	Description	Pieces Per Pkg	List Price
804069-01	EPDM Rubber Faceseal, Small	1	$ 184.00
804069-02	EPDM Rubber Faceseal, Large	1	$ 184.00
804069-03	EPDM Rubber Faceseal, X-Large	1	$ 184.00
804069-08	EPDM Rubber Faceseal, Comfort Seal™	1	$ 184.00
804069-11	Silicone Faceseal, Small	1	$ 209.00
804069-12	Silicone Faceseal, Large	1	$ 209.00
804069-13	Silicone Faceseal, X-Large	1	$ 209.00
804069-18	Silicone Faceseal, Comfort Seal	1	$ 209.00

AV-2000 Facepiece with Kevlar® Head Harness

Part Number	Description	Pieces Per Pkg	List Price
804191-01	EPDM Rubber Faceseal, Small	1	$ 237.00
804191-02	EPDM Rubber Faceseal, Large	1	$ 237.00
804191-03	EPDM Rubber Faceseal, X-Large	1	$ 237.00
804191-08	EPDM Rubber Faceseal, Comfort Seal™	1	$ 237.00
804191-11	Silicone Faceseal, Small	1	$ 262.00
804191-12	Silicone Faceseal, Large	1	$ 262.00
804191-13	Silicone Faceseal, X-Large	1	$ 262.00
804191-18	Silicone Faceseal, Comfort Seal	1	$ 262.00
804191-71	EPDM Rubber Faceseal, Small, Grey Nosecup	1	$ 237.00
804191-72	EPDM Rubber Faceseal, Large, Grey Nosecup	1	$ 237.00
804191-73	EPDM Rubber Faceseal, X-Large, Grey Nosecup	1	$ 237.00
804191-74	EPDM Rubber Faceseal, Comfort Seal, Grey Nosecup	1	$ 237.00

NOTE: AV-2000 facepieces with a grey nosecup are approved for use with the NFPA 2007 edition Scott Air-Pak® SCBA's

TOP DOWN CONVERTIBILITY™

The AV-2000 facepiece is fully interchangeable with Scott's full-line of SCBA, air-supplied respirators and air purifying respirators, as well as Scott's communications products providing "Top- Down Convertibility™" options. It is designed to minimize equipment inventories, simplify the complexities of user training when issued as a single personal issue facepiece and reduce redundant facepiece fit tests.

AV-2000 Facepiece with 4-Point Rubber Head Harness

Part Number	Description	Pieces Per Pkg	List Price
805257-01	EPDM Rubber Faceseal, Small	1	$ 180.00
805257-02	EPDM Rubber Facaeseal, Large	1	$ 180.00
805257-03	EPDM Rubber Faceseal, X-Large	1	$ 180.00
805257-08	EPDM Rubber Faceseal, Comfort Seal™	1	$ 180.00
805257-11	Silicone Faceseal, Small	1	$ 205.00
805257-12	Silicone Faceseal, Large	1	$ 205.00
805257-13	Silicone Faceseal, X-Large	1	$ 205.00
805257-18	Silicone Faceseal, Comfort Seal	1	$ 205.00

AV-2000 Facepiece with Snap-On 4-Point Rubber Head Harness

Part Number	Description	Pieces Per Pkg	List Price
804871-01	EPDM Rubber Faceseal, Small	1	$ 233.00
804871-02	EPDM Rubber Facaeseal, Large	1	$ 233.00
804871-03	EPDM Rubber Faceseal, X-Large	1	$ 233.00

AV/NBC Shroud™ and AV-2000 Facepiece Kit

Part Number	Description	List Price
200078-08	AV/NBC Shroud Installed on AV-2000 facepiece, Kevlar Harness, Comfort Seal	$ 482.50

AV-2000 Facepiece Lens Kits Accessories

Part Number	Description	List Price
200371-52F	52mm Facepiece Lens Kits (Frame Only for Prescription)	$ 99.00
200371-60F	60mm Facepiece Lens Kits (Frame Only for Prescription)	$ 99.00
200371-52B	52mm Facepiece Lens Kits (MSL™ - Metallized Surface Lenses [Blue])	$ 155.00
200371-60B	60mm Facepiece Lens Kits (MSL - Metallized Surface Lenses [Blue])	$ 155.00
200371-52S	52mm Facepiece Lens Kits (MSL - Metallized Surface Lenses [Silver])	$ 155.00
200371-60S	60mm Facepiece Lens Kits (MSL - Metallized Surface Lenses [Silver])	$ 155.00
200371-52Y	52mm Facepiece Lens Kits (SmokeSight XT™ [Yellow])	$ 155.00
200371-60Y	60mm Facepiece Lens Kits (SmokeSight XT [Yellow])	$ 155.00
200371-52G	52mm Facepiece Lens Kits (TCR™ True Color Reception Lenses™ [Grey])	$ 155.00
200371-60G	60mm Facepiece Lens Kits (TCR True Color Reception Lenses [Grey])	$ 155.00

AV-2000 Facepiece Part & Accessories

Item Number	Description	Pieces Per Pkg	Part Number	List Price
1	*HEAD HARNESSES*			
1a	Kevlar® Head Harness Assembly	1	804177-01	$ 137.80
1b	Polyester Head Harness Assembly	1	804063-01	$ 60.20
1c	4-Point Rubber Head Harness Assembly	1	805259-01	$ 51.05
2	*TEMPLE STRAPS*			
2a	Kevlar Temple Strap	1	804178-01	$ 18.20
2b	Polyester Temple Strap	1	804061-01	$ 14.40
3	*NECK STRAPS*			
3a	Kevlar Neck Strap	1	804176-01	$ 18.80
3b	Polyester Neck Strap	1	803920-01	$ 15.45
4	Lower Buckle Strap	1	803732-01	$ 5.50
5	AV-2000 Facepiece Lens	1	804018-01	$ 57.90
6	Lens Frame	1	10008068	$ 9.90
7	*FACEPIECE SEALS*			
7a	EPDM Rubber, Small (Green)	1	10005913	$ 38.35
7b	EPDM Rubber, Large (Black)	1	10005135	$ 36.15
7c	EPDM Rubber, X-Large (Red)	1	10006212	$ 37.10
7d	EPDM Rubber, Comfort Seal™ (Black)	1	10009779	$ 35.40
7e	Silicone, Small (Green)	1	10010497	$ 42.85
7f	Silicone, Large (Black)	1	10010498	$ 42.85
7g	Silicone, X-Large (Red)	1	10010499	$ 47.25
7h	Silicone, Comfort Seal (Black)	1	10010858	$ 47.25
8	Nosecup Retaining Ring	1	10008398	$ 2.95
9	*NOSECUP ASSEMBLY*			
9a	AV-2000 Facepiece Nosecup Assembly	1	804014-01	$ 80.75
9b	AV-2000 Facepiece Nosecup Assembly, Grey	1	31001256	$ 92.00
10	Inhalation Valve	1	10005603	$ 2.10
11	Voicemitter Duct	1	10008400	$ 5.80
12	Voicemitter	1	804010-01	$ 11.05
13	Frame Retaining Screws	1	10008492	$ 1.80
14	Anti-Rotation Washer	10	10008451	$ 1.05
15	Lens Frame Retainers	1	10008103	$ 3.20
Not shown	Communications Clamp, Right	1	804636-01	$ 18.00
Not shown	EPIC™ Communications Clamp, Right (AV-2000)	1	200716-01	$ 17.00
Not shown	EPIC™ Communications Clamp, Right (AV-3000)	1	200715-01	$ 19.00

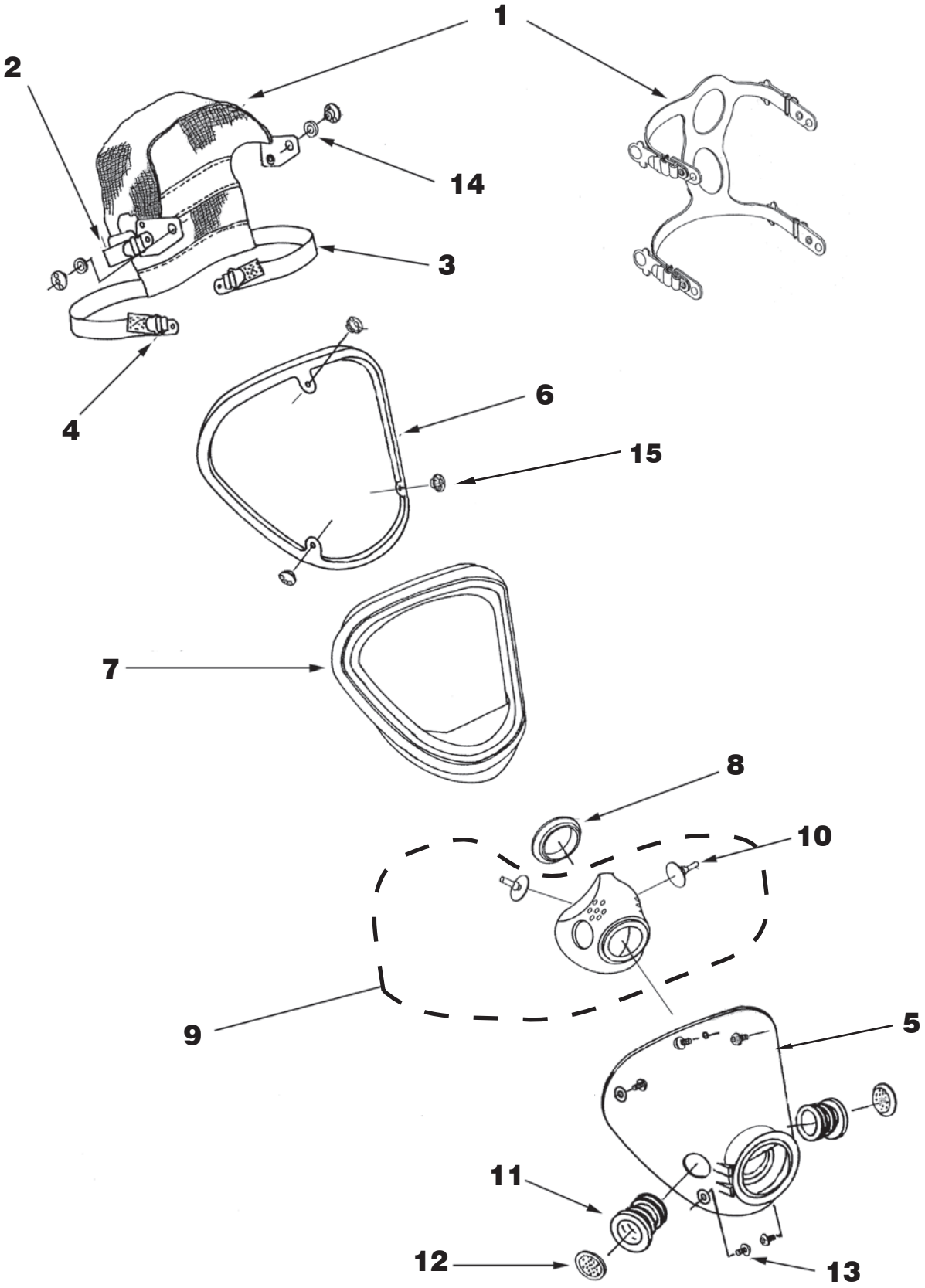
1
2
14
3
4
6
15
7
8
10
9
5
11
12
13

SCOTT-O-VISTA®

FACEPIECE

FastTrax

Select part numbers from this product line are part of the Scott Fast Trax Program. Contact your Regional Manager or Scott Customer Service for more details.

Scott-O-Vista Facepiece with Polyester Head Harness

Part Number	Description	Pieces Per Pkg	List Price
804067-01	EPDM Rubber Faceseal, Small	1	$ 127.00
804067-02	EPDM Rubber Faceseal, Large	1	$ 127.00
804067-03	EPDM Rubber Faceseal, X-Large	1	$ 127.00
804067-08	EPDM Rubber Faceseal, Comfort Seal™	1	$ 127.00
804067-11	Silicone Faceseal, Small	1	$ 153.00
804067-12	Silicone Faceseal, Large	1	$ 153.00
804067-13	Silicone Faceseal, X-Large	1	$ 153.00
804067-18	Silicone Faceseal, Comfort Seal	1	$ 153.00

Scott-O-Vista Facepiece with Kevlar® Head Harness

Part Number	Description	Pieces Per Pkg	List Price
804068-01	EPDM Rubber Faceseal, Small	1	$ 183.00
804068-02	EPDM Rubber Faceseal, Large	1	$ 183.00
804068-03	EPDM Rubber Faceseal, X-Large	1	$ 183.00
804068-08	EPDM Rubber Faceseal, Comfort Seal™	1	$ 183.00
804068-11	Silicone Faceseal, Small	1	$ 210.00
804068-12	Silicone Faceseal, Large	1	$ 210.00
804068-13	Silicone Faceseal, X-Large	1	$ 210.00
804068-18	Silicone Faceseal, Comfort Seal	1	$ 210.00

Scott-O-Vista Facepiece with 4-Point Rubber Head Harness

Part Number	Description	Pieces Per Pkg	List Price
805258-01	EPDM Rubber Faceseal, Small	1	$ 123.00
805258-02	EPDM Rubber Facaeseal, Large	1	$ 123.00
805258-03	EPDM Rubber Faceseal, X-Large	1	$ 123.00
805258-08	EPDM Rubber Faceseal, Comfort Seal™	1	$ 123.00
805258-11	Silicone Faceseal, Small	1	$ 149.00
805258-12	Silicone Faceseal, Large	1	$ 149.00
805258-13	Silicone Faceseal, X-Large	1	$ 149.00
805258-18	Silicone Faceseal, Comfort Seal	1	$ 149.00

TOP-DOWN CONVERTIBILITY™

The Scott-O-Vista facepiece is fully interchangeable with Scott's full-line of SCBA, air-supplied respirators and air purifying respirators, providing "Top- Down Convertibility™" options. It is designed to minimize equipment inventories, simplify the complexities of user training when issued as a single personal issue facepiece and reduce redundant facepiece fit tests.

Scott-O-Vista Facepiece Lens Kits Acessories

Part Number	Description	List Price
200371-52F	52mm Facepiece Lens Kits (Frame Only for Prescription)	$ 99.00
200371-60F	60mm Facepiece Lens Kits (Frame Only for Prescription)	$ 99.00
200371-52B	52mm Facepiece Lens Kits (MSL™ - Metallized Surface Lenses [Blue])	$ 155.00
200371-60B	60mm Facepiece Lens Kits (MSL - Metallized Surface Lenses [Blue])	$ 155.00
200371-52S	52mm Facepiece Lens Kits (MSL - Metallized Surface Lenses [Silver])	$ 155.00
200371-60S	60mm Facepiece Lens Kits (MSL - Metallized Surface Lenses [Silver])	$ 155.00
200371-52Y	52mm Facepiece Lens Kits (SmokeSight XT™ [Yellow])	$ 155.00
200371-60Y	60mm Facepiece Lens Kits (SmokeSight XT [Yellow])	$ 155.00
200371-52G	52mm Facepiece Lens Kits (TCR™ - True Color Reception Lenses™ [Grey])	$ 155.00
200371-60G	60mm Facepiece Lens Kits (TCR - True Color Reception Lenses [Grey])	$ 155.00

Scott-O-Vista Facepiece Part & Accessories

Item Number	Description	Pieces Per Pkg	Part Number	List Price
1	*HEAD HARNESSES*			
1a	Kevlar® Head Harness Assembly	1	804177-01	$ 137.80
1b	Polyester Head Harness Assembly	1	804063-01	$ 60.20
1c	4-Point Rubber Head Harness Assembly	1	805259-01	$ 51.05
2	*TEMPLE STRAPS*			
2a	Kevlar Temple Strap	1	804178-01	$ 18.20
2b	Polyester Temple Strap	1	804061-01	$ 14.40
3	*NECK STRAPS*			
3a	Kevlar Neck Strap	1	804176-01	$ 18.80
3b	Polyester Neck Strap	1	803920-01	$ 15.45
4	Lower Buckle Strap	1	803732-01	$ 5.50
5	Scott-O-Vista® Facepiece Lens	1	803928-01	$ 43.30
6	Lens Frame	1	10008068	$ 9.90
7	*FACEPIECE SEALS*			
7a	EPDM Rubber, Small	1	10005913	$ 38.35
7b	EPDM Rubber, Large	1	10005135	$ 36.15
7c	EPDM Rubber, X-Large	1	10006212	$ 37.10
7d	EPDM Rubber, Comfort Seal™	1	10009779	$ 35.40
7e	Silicone, Small	1	10010497	$ 42.85
7f	Silicone, Large	1	10010498	$ 42.85
7g	Silicone, X-Large	1	10010499	$ 47.25
7h	Silicone, Comfort Seal	1	10010858	$ 47.25
8	Frame Retaining Screws	1	10008492	$ 1.80
9	Anti-Rotation Washer	10	10008451	$ 1.05
10	Lens Frame Retainers	1	10008103	$ 3.20

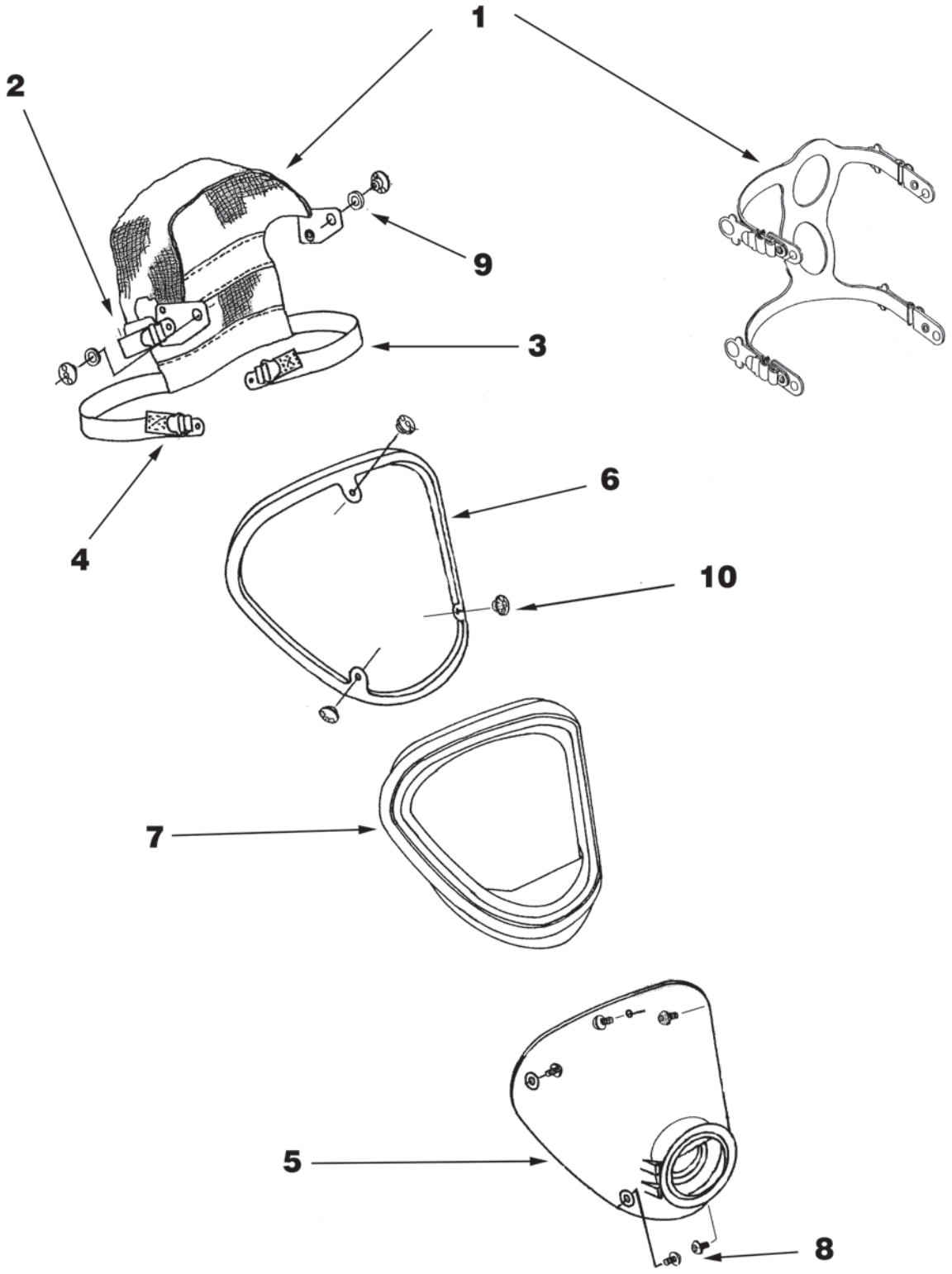
1
2
9
3
4
6
10
7
5
8

WELD-O-VISTA™

FACEPIECE ASSEMBLIES

FastTrax

Select part numbers from this product line are part of the Scott Fast Trax Program. Contact your Regional Manager or Scott Customer Service for more details.

Weld-O-Vista Facepiece with Kevlar® Head Harness

Part Number	Description	Pieces Per Pkg	List Price
805438-01	EPDM Rubber Faceseal, Small	1	$ 325.00
805438-02	EPDM Rubber Faceseal, Large	1	$ 325.00
805438-03	EPDM Rubber Faceseal, X-Large	1	$ 325.00
805438-08	EPDM Rubber Faceseal, Comfort Seal™	1	$ 325.00
805438-11	Silicone Faceseal, Small	1	$ 350.00
805438-12	Silicone Faceseal, Large	1	$ 350.00
805438-13	Silicone Faceseal, X-Large	1	$ 350.00
805438-18	Silicone Faceseal, Comfort Seal	1	$ 350.00

Weld-O-Vista Facepiece with 4-Point Rubber Head Harness

Part Number	Description	Pieces Per Pkg	List Price
805438-21	EPDM Rubber Faceseal, Small	1	$ 276.00
805438-22	EPDM Rubber Faceseal, Large	1	$ 276.00
805438-23	EPDM Rubber Faceseal, X-Large	1	$ 276.00
805438-28	EPDM Rubber Faceseal, Comfort Seal	1	$ 276.00
805438-31	Silicone Faceseal, Small	1	$ 302.00
805438-32	Silicone Faceseal, Large	1	$ 302.00
805438-33	Silicone Faceseal, X-Large	1	$ 302.00
805438-38	Silicone Faceseal, Comfort Seal	1	$ 302.00

Weld-O-Vista Facepiece with Kevlar Head Harness and Welding Hood

Part Number	Description	Pieces Per Pkg	List Price
805438-41	EPDM Rubber Faceseal, Small	1	$ 448.00
805438-42	EPDM Rubber Faceseal, Large	1	$ 448.00
805438-43	EPDM Rubber Faceseal, X-Large	1	$ 448.00
805438-48	EPDM Rubber Faceseal, Comfort Seal	1	$ 448.00
805438-51	Silicone Faceseal, Small	1	$ 475.00
805438-52	Silicone Faceseal, Large	1	$ 475.00
805438-53	Silicone Faceseal, X-Large	1	$ 475.00
805438-58	Silicone Faceseal, Comfort Seal	1	$ 475.00

TOP-DOWN CONVERTIBILITY™

The Weld-O-Vista facepiece is fully interchangeable with Scott's full-line of SCBA, air-supplied respirators and air purifying respirators, as well as Scott's communications products providing "Top- Down Convertibility™" options. It is designed to minimize equipment inventories, simplify the complexities of user training when issued as a single personal issue facepiece and reduce redundant facepiece fit tests.

Weld-O-Vista® Facepiece with 4-Point Rubber Head Harness and Welding Hood

Part Number	Description	Pieces Per Pkg	List Price
805438-61	EPDM Rubber Faceseal, Small	1	$ 398.00
805438-62	EPDM Rubber Faceseal, Large	1	$ 398.00
805438-63	EPDM Rubber Faceseal, X-Large	1	$ 398.00
805438-68	EPDM Rubber Faceseal, Comfort Seal™	1	$ 398.00
805438-71	Silicone Faceseal, Small	1	$ 425.00
805438-72	Silicone Faceseal, Large	1	$ 425.00
805438-73	Silicone Faceseal, X-Large	1	$ 425.00
805438-78	Silicone Faceseal, Comfort Seal	1	$ 425.00

Weld-O-Vista Facepiece Lens Kits Accessories

Part Number	Description	List Price
200371-52F	52mm Facepiece Lens Kits (Frame Only for Prescription)	$ 99.00
200371-60F	60mm Facepiece Lens Kits (Frame Only for Prescription)	$ 99.00
200371-52B	52mm Facepiece Lens Kits (MSL™ - Metallized Surface Lenses [Blue])	$ 155.00
200371-60B	60mm Facepiece Lens Kits (MSL - Metallized Surface Lenses [Blue])	$ 155.00
200371-52S	52mm Facepiece Lens Kits (MSL - Metallized Surface Lenses [Silver])	$ 155.00
200371-60S	60mm Facepiece Lens Kits (MSL - Metallized Surface Lenses [Silver])	$ 155.00
200371-52Y	52mm Facepiece Lens Kits (SmokeSight XT™ [Yellow])	$ 155.00
200371-60Y	60mm Facepiece Lens Kits (SmokeSight XT [Yellow])	$ 155.00
200371-52G	52mm Facepiece Lens Kits (TCR™ True Color Reception Lenses™ [Grey])	$ 155.00
200371-60G	60mm Facepiece Lens Kits (TCR True Color Reception Lenses [Grey])	$ 155.00

Weld-O-Vista® Facepiece Part & Accessories

Item Number	Description	Pieces Per Pkg	Part Number	List Price
1	*HEAD HARNESSES*			
1a	Kevlar® Head Harness Assembly	1	804177-01	$ 137.80
1b	4-Point Rubber Head Harness Assembly	1	805259-01	$ 51.05
2	*TEMPLE STRAPS*			
2a	Kevlar Temple Strap	1	804178-01	$ 18.20
3	*NECK STRAPS*			
3a	Kevlar Neck Strap	1	804176-01	$ 18.80
4	Lower Buckle Strap	1	803732-01	$ 5.50
5	Lens Frame	1	10008068	$ 9.90
6	*FACEPIECE SEALS*			
6a	EPDM Rubber, Small (Green)	1	10005913	$ 38.35
6b	EPDM Rubber, Large (Black)	1	10005135	$ 36.15
6c	EPDM Rubber, X-Large (Red)	1	10006212	$ 37.10
6d	EPDM Rubber, Comfort Seal™ (Black)	1	10009779	$ 35.40
6e	Silicone, Small (Green)	1	10010497	$ 42.85
6f	Silicone, Large (Black)	1	10010498	$ 42.85
6g	Silicone, X-Large (Red)	1	10010499	$ 47.25
6h	Silicone, Comfort Seal (Black)	1	10010858	$ 47.25
7	Nosecup Retaining Ring	1	10008398	$ 2.95
8	Nosecup Assembly	1	804014-01	$ 80.75
9	Inhalation Valve	1	10005603	$ 2.10
10	*LENS ACCESSORIES*			
10a	Lens Accessories w/Nosecup & Voicemitter, EPDM	1	805574-01	$ 202.55
10b	Lens Accessories w/Nosecup & Voicemitter, EPDM	1	805537-01	$ 156.25
11	Voicemitter Duct	1	10008400	$ 5.80
12	Voicemitter	1	804010-01	$ 11.05
13	Weld-O-Vista® Facepiece Hood Installation Kit	1	805182-01	$ 42.95
14	Lens Separator & Lens Retainer Kit	1	805536-01	$ 7.70
15	Weld-O-Vista Facepiece Hood Installation Kit	1	805289-03	$ 152.50
16	Frame Retaining Screws	1	10008492	$ 1.80
17	Anti-Rotation Washer	10	10008451	$ 1.05
18	Weld-O-Vista Facepiece Integrated Snap & Nut	1	10010978	$ 5.70

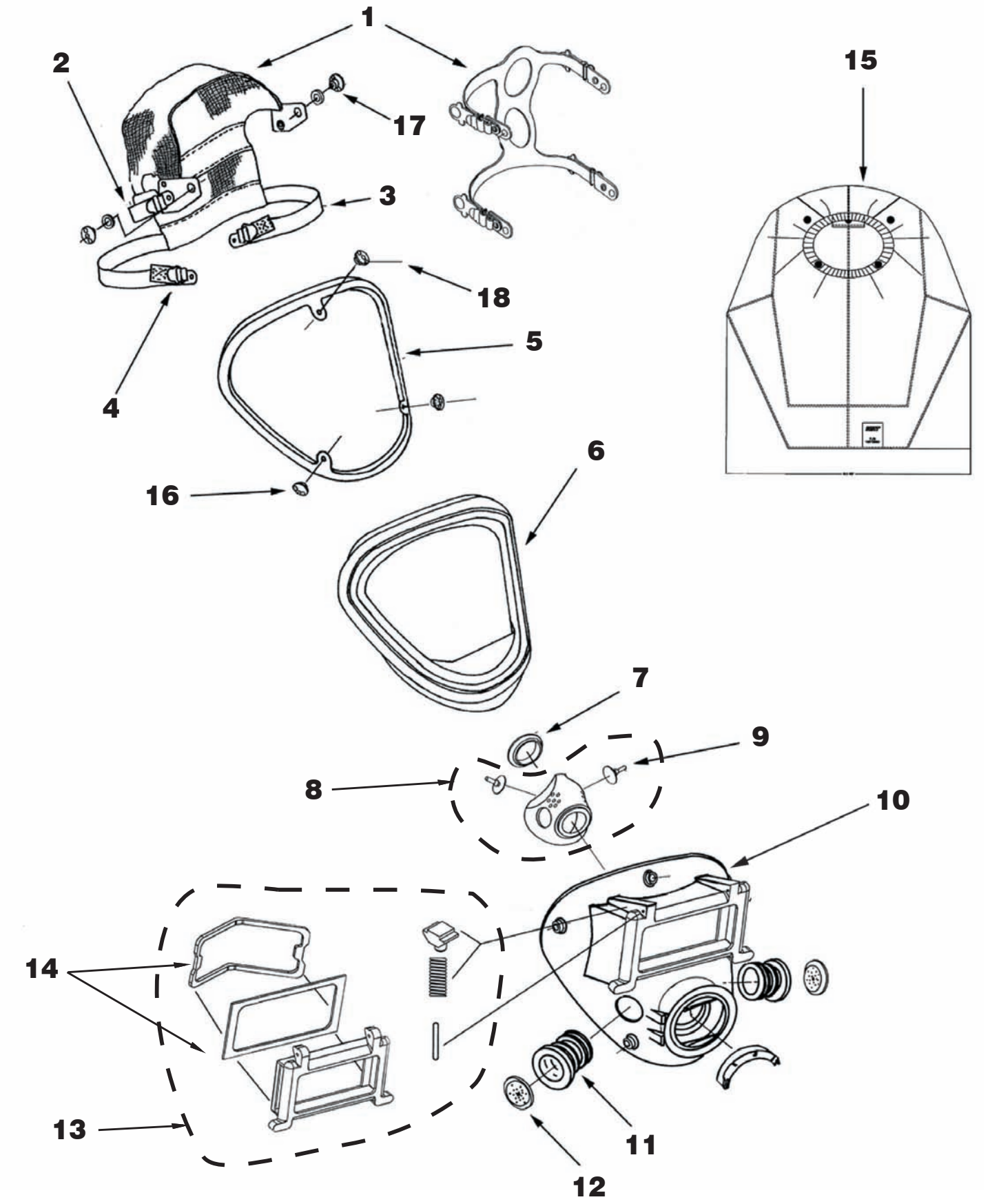
1
2
17
3
15
18
5
4
6
16
7
9
8
10
14
13
11
12

PROMASK 25

FACEPIECE

Select part numbers from this product line are part of the Scott Fast Trax Program. Contact your Regional Manager or Scott Customer Service for more details.

Promask 25 Facepiece

Part Number	Description	Pieces Per Pkg	List Price
013024	Rubber Head Harness, Polycarbonate Lens	1	$ 114.00
013063	Rubber Head Harness, Hard Coated Lens	1	$ 169.00
013027	Rubber Head Harness, Polycarbonate Lens, Small	1	$ 114.00
013067	Rubber Head Harness, Hard Coated Lens, Small	1	$ 169.00
013023	Textile Head Harness, Polycarbonate Lens	1	$ 117.00
013064	Textile Head Harness, Hard Coated Lens	1	$ 172.00
013028	Textile Head Harness, Polycarbonate Lens, Small	1	$ 117.00
013068	Textile Head Harness, Hard Coated Lens, Small	1	$ 172.00

Promask 25 requires two of each for the 742 Series twin cartridges. - (see page 80)

Promask 25 Facepiece Lens Kits Acessories

Part Number	Description	List Price
200373-52F	52mm Facepiece Lens Kits (Frame Only for Prescription)	$ 99.00
200373-60F	60mm Facepiece Lens Kits (Frame Only for Prescription)	$ 99.00
200373-52B	52mm Facepiece Lens Kits (MSL™ - Metallized Surface Lenses [Blue])	$ 155.00
200373-60B	60mm Facepiece Lens Kits (MSL - Metallized Surface Lenses [Blue])	$ 155.00
200373-52S	52mm Facepiece Lens Kits (MSL - Metallized Surface Lenses [Silver])	$ 155.00
200373-60S	60mm Facepiece Lens Kits (MSL - Metallized Surface Lenses [Silver])	$ 155.00
200373-52Y	52mm Facepiece Lens Kits (SmokeSight XT™ [Yellow])	$ 155.00
200373-60Y	60mm Facepiece Lens Kits (SmokeSight XT [Yellow])	$ 155.00
200373-52G	52mm Facepiece Lens Kits (TCR™ True Color Reception Lenses™ [Grey])	$ 155.00
200373-60G	60mm Facepiece Lens Kits (TCR True Color Reception Lenses [Grey])	$ 155.00

Promask 25 Facepiece Part & Accessories

Item Number	Description	Pieces Per Pkg	Part Number	List Price
1	Speech Diaphragm Assembly Kit	1	012778	$ 11.05
2	Exhalation Valve Cover	1	012688	$ 6.05
3	Exhalation Valve Disc	1	013374	$ 4.00
4	Nosecup Valve Seats	2	012773	$ 3.60
5	Valve Discs	4	012774	$ 8.20
6	Nosecup with Fastening Ring	1	012776	$ 28.70
7	Head Harness, EPDM (less buckles)	1	012692	$ 22.60
8	Head Harness, Textile (less buckles) (not shown)	1	012775	$ 23.10
9	Visor Frame Set (Top, Bottom, 2 Screws)	1	012693	$ 9.70
10	Harness Buckles	5	012694	$ 6.30
11	Visor	1	012695	$ 24.30
12	Visor (Hard Coated)	1	012795	$ 77.20
13	Lens Cover	10	012698	$ 25.35
14	Spectacle Kit	1	012798	$ 14.30
15	Spectacle Kit (larger lens)	1	805753-01	$ 42.35
16	Facepiece Bag	1	805534-01	$ 20.60
17	Speech Channel Cover kit	1	012779	$ 12.60
18	Filter Gasket	2	012789	$ 5.55

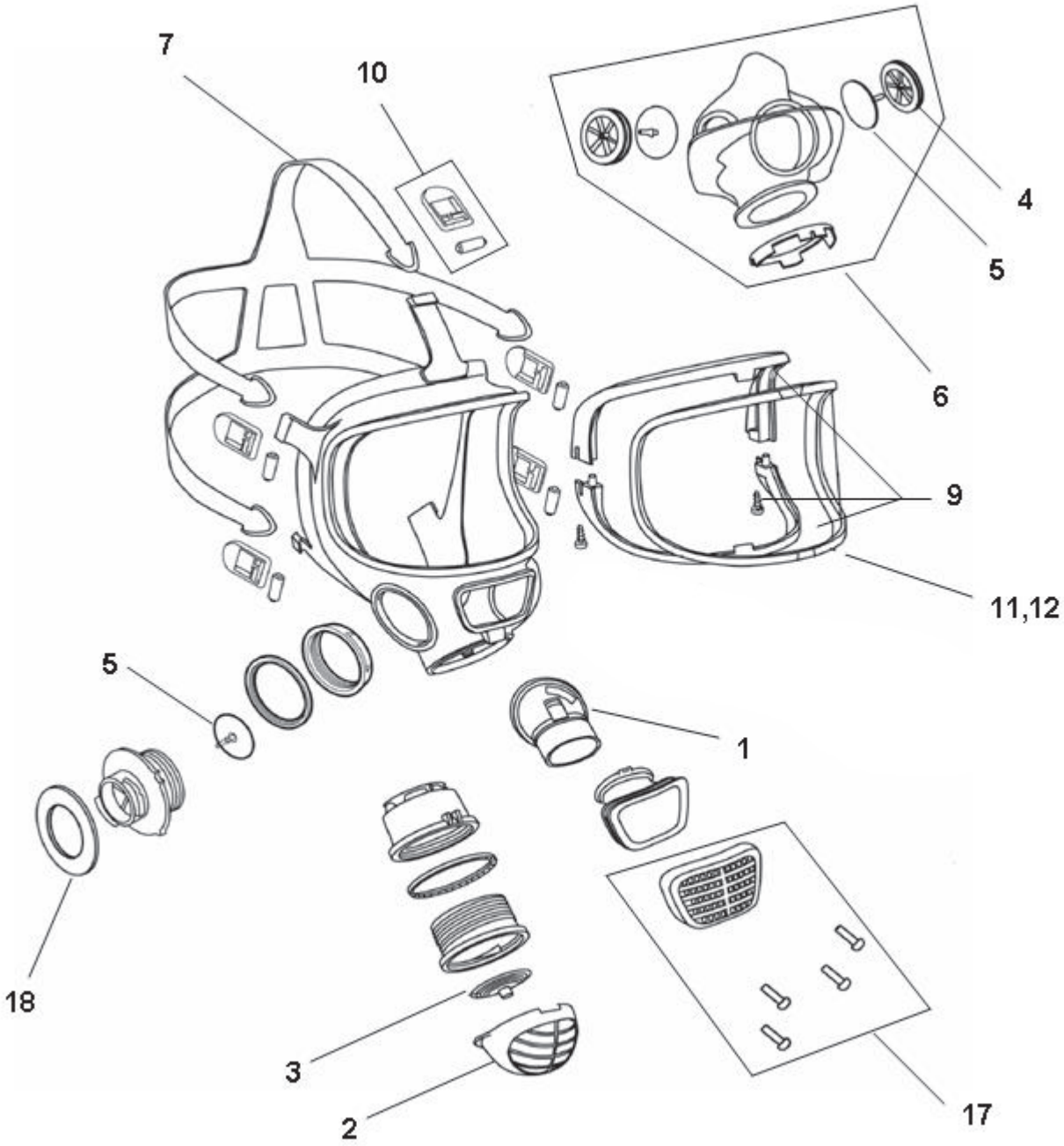
7
10
4
5
6
9
11,12
5
1
18
3
2
17

M110

CBRN DUAL LENS FACEPIECE

M110 CBRN Dual Lens Facepiece (CDLF)

Part Number	Description	List Price
013262	M110 (CDLF), Medium/Large Size	$ 225.00
013282	M110 (CDLF), Medium/Large Size with Drinking Device	$ 249.00
013242	M110 (CDLF), Small size	$ 225.00
013222	M110 (CDLF), Small size with Drinking Device	$ 249.00
31001104	M110 (CDLF) Kit (with one M110 (CDLF) Medium/Large size with one CBRN Canister)	$ 246.00
31001103	M110 (CDLF) Kit (with one M110 (CDLF) Medium/Large size with Drinking Device and one CBRN canister)	$ 274.05

Canister

Part Number	Description	List Price
045135	CBRN CAP 1 canister	$ 42.00
805557-01	MPC Plus Cartridge	$ 19.00
052683	P100 Cartridge	$ 9.10
045123	Enforcement Cartridge	$ 28.00

Accessories

Part Number	Description	List Price
012798	Spectacle Kit	$ 14.30
012593	Drinking Bottle	$ 21.65
012592	Speech Diaphragm	$ 4.65
10011882	Tactical Facepiece Bag with Belt Mounting	$ 57.90
10012151	Shoulder Strap for Tactical Facepiece Bag	$ 16.70
10012152	Leg Strap for Tactical Facepiece Bag	$ 10.00
805534-01	Fleece Facepiece Bag	$ 20.60

Replacement Parts

Part Number	Description	Pieces Per Pkg	List Price
012577	Exhalation valve set assembly	1	$ 4.20
012571	Exhalation valve cover	1	$ 2.85
012774	Inhalation valve discs, set of four (4)	4	$ 8.20
013372	Inhalation valve seats, set of two (2)	2	$ 7.05
012574	Nose cup for regular M110 (CDLF)	1	$ 29.75
012575	Nose cup for small M110 (CDLF)	1	$ 29.75
012773	Nose cup valve seats, set of two (2)	2	$ 3.60
012598	Head harness	1	$ 23.20
012592	Speech diaphragm plug	8	$ 4.65
012594	Mouthpiece, drinking device (if equipped)	1	$ 4.65
012597	Lid, drinking device (if equipped)	10	$ 5.70

M120

CBRN FACEPIECE

M120 CBRN Facepiece

Part Number	Description	List Price
013013	M120 CBRN Facepiece, Medium/Large Size	$ 225.00
013014	M120 CBRN Facepiece, Small Size	$ 225.00
31001057	M120 CBRN Facepiece Kit (includes one medium/large size M120 CBRN Facepiece and one CBRN canister)	$ 258.30
31001058	M120 CBRN Facepiece Kit (includes one small size M120 CBRN Facepiece and one CBRN canister)	$ 258.30

Canister

Part Number	Description	List Price
045135	CBRN CAP 1 canister	$ 42.00
805557-01	MPC Plus Cartridge	$ 19.00
052683	P100 Cartridge	$ 9.10
045123	Enforcement Cartridge	$ 28.00

Accessories

Part Number	Description	List Price
805753-01	Spectacle Kit (large openings)	$ 42.35
012798	Alternate Spectacle Kit	$ 14.30
10011882	Tactical Facepiece Bag with Belt Mounting	$ 57.90
10012151	Shoulder Strap for Tactical Facepiece Bag	$ 16.70
10012152	Leg Strap for Tactical Facepiece Bag	$ 10.00
805534-01	Fleece Facepiece Bag	$ 20.60

Replacement Parts

Part Number	Description	List Price
012571	Exhalation Valve Cover	$ 2.85
012577	Exhalation Valve Set Assembly	$ 4.20
013372	Inhalation Valve Seats (EPDM), Set of two (2)	$ 7.05
012773	Nosecup Valve Seats, set of two (2)	$ 3.60
012774	Valve Discs, set of four (4)	$ 8.20
012776	Nosecup w/Fastening Ring	$ 28.70
012692	Head harness (ribbed)	$ 22.60
013377	40mm Plug	$ 2.30
012694	Harness Buckles, set of five (5)	$ 6.30

XCEL HALFMASK

ASSEMBLIES

FastTrax

Select part numbers from this product line are part of the Scott Fast Trax Program. Contact your Regional Manager or Scott Customer Service for more details.

Xcel Half-Mask Assembly

Part Number	Description	Pieces Per Pkg	List Price
7421-111	Xcel Halfmask, Small	1	$ 20.00
7421-112	Xcel Halfmask, Small/Medium	1	$ 20.00
7421-113	Xcel Halfmask, Medium/Large	1	$ 20.00
7421-114	Xcel Halfmask, Large	1	$ 20.00
7421-111V	Xcel Halfmask with Voicemitter, Small	1	$ 27.60
7421-112V	Xcel Halfmask with Voicemitter, Small/Medium	1	$ 27.60
7421-113V	Xcel Halfmask with Voicemitter, Medium/large	1	$ 27.60
7421-114V	Xcel Halfmask with Voicemitter, Large	1	$ 27.60

Accessories

Part Number	Description	Pieces Per Pkg	List Price
10010068	Multi-Wash™ Mini Disinfectant, 16 oz (min buy: 6pcs)	1	$ 10.50
10010304	Multi-Wash Mini Disinfectant, 1 Gal (min buy: 4pcs)	1	$ 62.20
7422-FT1	Quantitative Fit Test Adapter Kit	1	$ 36.25
7422-FE4	Filter Enclosure and Holder	5 pair	$ 36.40
7422-FC4	Filter Enclosure	5 pair	$ 21.80

Xcel Mask- Probed for Fit Testing
Designed for use with PortaCount®. P100 Cartridges must be ordered separately.

Part Number	Description	Pieces Per Pkg	List Price
7421-PF1	Xcel Halfmask, Probed, Small	1	$ 28.00
7421-PF2	Xcel Halfmask, Probed, Small/Medium	1	$ 28.00
7421-PF3	Xcel Halfmask, Probed, Medium/Large	1	$ 28.00
7421-PF4	Xcel Halfmask, Probed, Large	1	$ 28.00

Replacement Parts

Item Number	Description	Pieces Per Pkg	Part Number	List Price
2	Inhalation Valve (Set of 4)	4	200211-01	$ 9.05
3	Exhalation Valve	1	13870-00	$ 4.75
4	Exhalation Valve Cover	10	10011094	$ 1.30
6-8	Head Harness Assembly	1	7420-108	$ 7.50
7	Head Harness Clip	10	10011095	$ 1.00
8	Head Harness D-Ring	10	10011096	$ 1.00

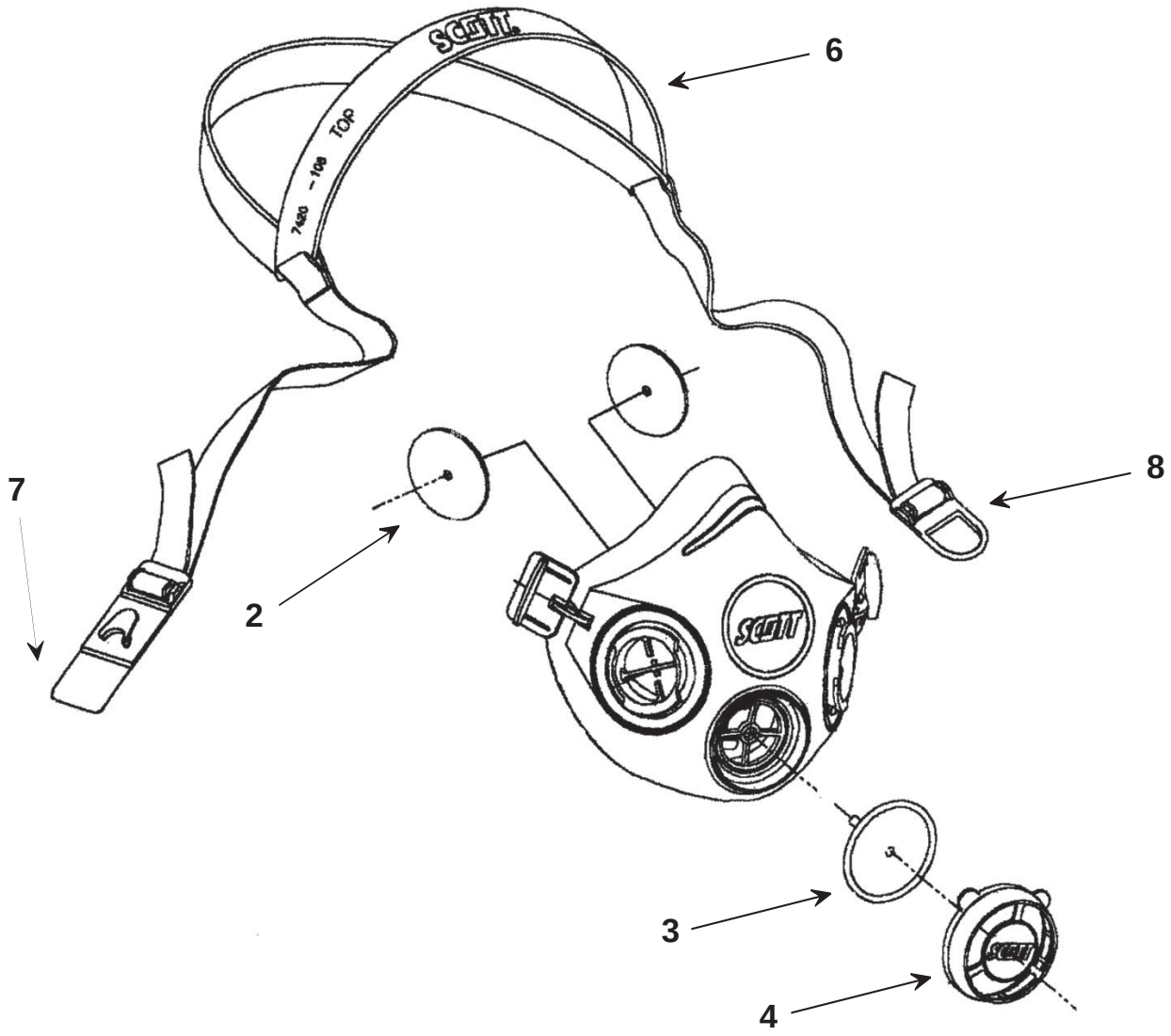

MODEL 66 HALFMASK

ASSEMBLIES

FastTrax

Select part numbers from this product line are part of the Scott Fast Trax Program. Contact your Regional Manager or Scott Customer Service for more details.

Model 66® Half-Mask

Part Number	Description	Pieces Per Pkg	List Price
803404-01	EPDM/Rubber Faceseal, Small	1	$ 29.70
803404-02	EPDM/Rubber Faceseal, Medium	1	$ 29.70
803404-03	EPDM/Rubber Faceseal, Large	1	$ 29.70
803404-11	Silicone Faceseal, Small	1	$ 37.75
803404-12	Silicone Faceseal, Medium	1	$ 37.75
803404-13	Silicone Faceseal, Large	1	$ 37.75

Model 66 Probed Half-Mask (For Fit Testing)

Part Number	Description	Pieces Per Pkg	List Price
803550-01	EPDM/Rubber Faceseal, Small	1	$ 48.00
803550-02	EPDM/Rubber Faceseal, Medium	1	$ 48.00
803550-03	EPDM/Rubber Faceseal, Large	1	$ 48.00
803550-11	Silicone Faceseal, Small	1	$ 55.00
803550-12	Silicone Faceseal, Medium	1	$ 55.00
803550-13	Silicone Faceseal, Large	1	$ 55.00

Model 66 Half-Mask Parts and Accessories

Item Number	Description	Pieces Per Pkg	Part Number	List Price
1	Head Harness Assembly	1	803549-01	$ 13.65
2	FACESEALS			
2a	EPDM/Rubber Faceseal, Small	1	803490-01	$ 12.75
2b	Silicone Faceseal, Small	1	803490-11	$ 19.65
2c	EPDM/Rubber Faceseal, Medium	1	803491-01	$ 12.75
2d	Silicone Faceseal, Medium	1	803491-11	$ 19.65
2e	EPDM/Rubber Faceseal, Large	1	803492-01	$ 12.75
2f	Silicone Faceseal, Large	1	803492-11	$ 19.65
3	Inhalation Valve	1	64197-01	$ 2.55
4	Harness Adjuster	1	10006681	$ 1.65
5	Shell Assembly	1	803485-01	$ 5.05
6	Gasket	1	802471-01	$ 1.70
7	Exhalation Valve	1	13870-00	$ 4.75
8	Exhalation Valve Guard	1	10006652	$ 1.80

MODEL 66 FACEPIECE PARTS EXPLODED VIEW

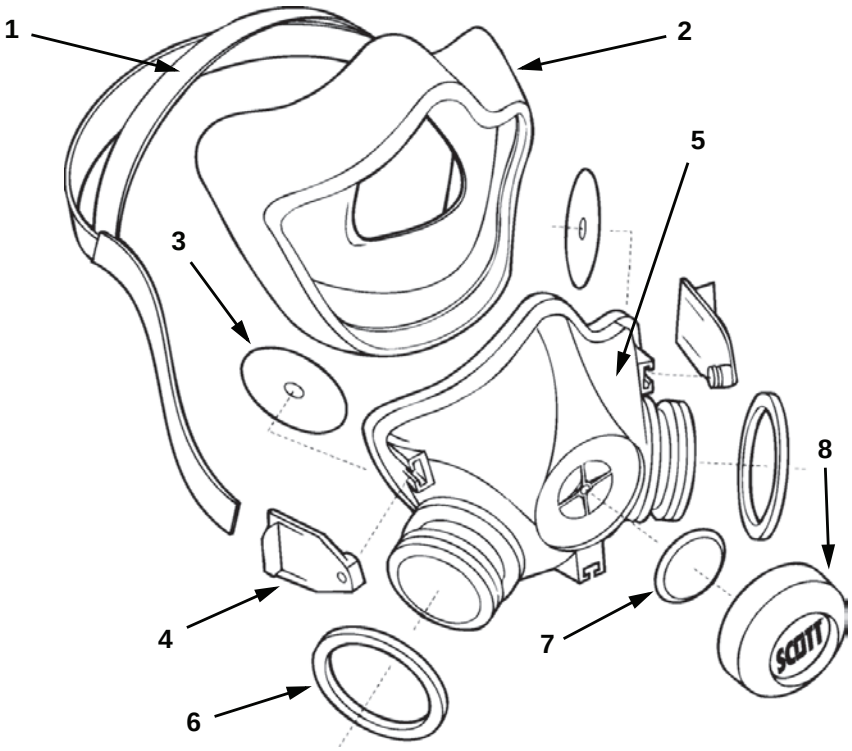

TORNADO®

POWERED AIR PURIFYING UNIT

FastTrax

Select part numbers from this product line are part of the Scott Fast Trax Program. Contact your Regional Manager or Scott Customer Service for more details.

Tornado PAPR

Part Number	Description	Pieces Per Pkg	List Price
200118-02	Tornado PAPR Kit blower unit, waist belt, airflow indicator, smart battery charger, intrinsically safe black battery.		$ 510.00
2002115	T1 Small lightweight loose-fitting facepiece		$ 76.00
2002116	T1 Med/Large lightweight loose-fitting facepiece	Each	$ 76.00
2002118	T2 Lightweight full hood w/ necktie seal	Each	$ 69.00
2002135	T3 Loose fitting facepiece w/ ANSI face protection	Each	$ 125.00
2002139	T5 Loose fitting facepiece with hard hat protection	Each	$ 175.00
2002151	T7 Med/Large tight fitting full facepiece	Each	$ 180.00
2002145	T7 Small tight fitting full facepiece	Each	$ 180.00
2002066	Tornado PAPR power unit - blower unit with air flow indicator & waist belt	Each	$ 220.00
2009372	Tornado (Black) IS battery	Each	$ 153.00
1074593	TF551/6 HEPA - dust, fumes, mists, radionucleides and radon daughters	Box of 6	$ 126.40

Tornado PAPR Parts and Accessories

T1 Spares

Part Number	Description	Pieces Per Pkg	List Price
2003893	Replacement half hood with valve (medium/large)	5	$ 131.00
2003892	Replacement half hood with valve (small/medium)	5	$ 131.00
1070811	Replacement PVC hose complete	3	$ 54.60
1070804	Spare exhalation valves	2	$ 5.15
1051820	Tear off visor kit	10	$ 16.50

T2 Spares

Part Number	Description	Pieces Per Pkg	List Price
2003906	Replacement half hood with valve	5	$ 194.00
1070811	Replacement PVC hose complete	3	$ 54.60
1070804	Spare exhalation valves	2	$ 5.15
1051820	Tear off visor kit	10	$ 16.50

T3 Spares

Part Number	Description	Pieces Per Pkg	List Price
1070631	Replacement hood with valve	5	$ 151.40
1070843	Replacement polyurethane hose complete	3	$ 81.40
1070804	Spare exhalation valves	2	$ 5.15
1070635	Pack of nuts, washer, and screws for pivot fixing	2	$ 8.25
1070636	Visor shell only with velcro fixing	1	$ 21.60
1070638	Replacement polycarbonate anti mist face screen	1	$ 27.85
1070629	Complete head harness including duct	1	$ 44.30
1051821	Tear off visor kit	10	$ 18.55
2006702	Spare sweatband	20	$ 16.30

T5 Spares

Part Number	Description	Pieces Per Pkg	List Price
1070656	Anti-mist polycarbonate visor/faceseal assembly with exhale valve	1	$ 55.55
1070843	Replacement polyurethane hose complete (no magnet)	3	$ 81.40
1070804	Spare exhalation valves	2	$ 5.15
1070647	Brim trimming	3	$ 72.10
1051591	Spare ratchet head harness	1	$ 9.50
1051820	Tear off visor kit	10	$ 16.50
1072374	Pivot mounting	1	$ 4.15
2006702	Spare sweatband	20	$ 16.30

PROFLOW 2

POWERED AIR PURIFYING RESPIRATOR

Proflow 2 Powered Air Purifying Respirator (PAPR)

Part Number	Description	List Price
805810-03	Proflow 2 PAPR SC Blower Unit (Includes: blower unit w/integrated rechargeable battery, single charger, textile waist belt and breathing tube)	$ 672.00
805810-02	Proflow 2 PAPR SC Blower Unit with AV-2000 facepiece (Comfort Seal), with Kevlar head harness	$ 895.00
805810-05	Proflow 2 PAPR SC Blower Unit with AV-2000 facepiece (Comfort Seal) w/ Kevlar head harness and NBC Shroud	$ 1,125.00
805810-06	Proflow 2 PAPR SC Blower Unit with Charger, AV-3000 facepiece (medium) w/ Kevlar head harness	$ 915.00

PROFLOW 3

POWERED AIR PURIFYING RESPIRATOR

Proflow 3 Powered Air Purifying Respirator (PAPR)

Part Number	Description	List Price
805820-01	Proflow 3 PAPR blower unit with nylon waistbelt integrated rechargeable battery, and single unit charger (Breathing tube not included)	$ 925.00
805820-03	Proflow 3 PAPR system complete, AV 2000® facepiece Kevlar® (CS)	$ 1,122.00
805820-04	Proflow 3 PAPR system complete, AV-3000™ facepiece Kevlar (Med.)	$ 1,132.00
805820-05	Proflow 3 PAPR SC blower unit with small butyl hood w/hose and charger	$ 1,150.00
805820-06	Proflow 3 PAPR SC blower unit large butyl hood w/hose and charger	$ 1,150.00

Proflow 2 SC and Proflow 3 Powered Air Purifying Respirator Accessories

Part Number	Description	List Price
045123	Enforcement cartridge	$ 28.00
052683	P100/HEPA cartridge	$ 9.10
063791	Spare single charger	$ 129.80
064072	Nylon textile waistbelt	$ 16.20
064073	Breathing tube (for butyl hood)	$31.50
064074	Smooth PVC belt	$ 16.20
064077	Breathing tube (for facepieces), standard 31 inch	$ 36.75
064079	Breathing tube (for facepieces) extra long 39 inch	$ 36.75
064088	Proflow 3 PAPR blower unit, only with integrated rechargeable battery pack with textile waistbelt (no hose)	$ 825.00
200218-01	Butyl hood accessory (small) with breathing tube included	$ 283.50
200218-02	Butyl hood accessory (large) with breathing tube included	$ 283.50
31000578	Proflow PAPR Carrying Bag Kit	$ 30.35
805059-01	40mm connector for AV Series facepieces	$ 35.20
805557-01	MPC Plus Cartridge (NIOSH Approved w/Proflow 2 only)	$ 19.00

C420

POWERED AIR PURIFYING

C420 PAPR

Part Number	Description	Pieces Per Pkg	List Price
805371-02	C420 PAPR (Includes Blower Unit, Breathing Tube, 40 mm Adapter, Decontamination Belt & Air Flow Indicator)	1	$ 790.65
805635-02	C420 PAPR (Includes Blower Unit, Breathing Tube, 40 mm Adapter, Decont. Belt & Air Flow Indicator & Lithium Sulfur Dioxide Battery)	1	$ 846.30
805633-02	C420 PAPR (Includes Blower Unit, Breathing Tube, 40 mm Adapter, Decontamination Belt & Air Flow Indicator, Lithium Sulfur Dioxide Battery & AV-2000® Facepiece w/Kevlar® Headnet)	1	$ 1,034.25
805634-02	C420 PAPR (Includes Blower Unit, Breathing Tube, 40 mm Adapter, Decontamination Belt & Air Flow Indicator, Lithium Sulfur Dioxide Battery & AV-2000 Facepiece w/Rubber Head Harness)	1	$ 995.40
805636-02	C420 PAPR (Includes Blower Unit, Breathing Tube,Decontamination Belt & Air Flow Indicator,Lithium Sulfur Dioxide Battery, AV-2000 Facepiece w/ Kevlar Headnet)	1	$1,254.75

C420 Powered Air Purifying Respirators (PAPR) Parts & Accessories

Item Number	Description	Pieces Per Pkg	Part Number	List Price
1	*FACEPIECES*	See pages 50-63		
2	40 mm Adapter	1	805059-01	$ 35.20
3	Breathing Tube Assembly	1	805370-02	$ 96.20
4	C420 PAPR Blower Unit (Includes belt & battery tube)	1	805562-01	$ 661.50
5	Decontamination Belt	1	805359-01	$ 51.05
6	*CARTRIDGES AND CANISTERS*			
6a	Multi-Purpose Plus (MPC Plus) Cartridge (2 Required) ❶	1	805557-01	$ 19.00
6b	Enforcement Cartridge (2 Required)	1	045123	$ 28.00
7	*POWER SUPPLY*	1		
7a	Battery Pack Assembly, Lithium Sulfur Dioxide	1	805358-01	$ 82.75
7b	Battery Pack Assembly, Nickel Metal Hydride, Rechargeable ❷	1	805839-01	$ 156.80
7c	Single Unit Battery Recharger ❷	1	200703-01	$ 195.00
8	Air Flow Indicator	1	805374-01	$ 24.60
9	AV-NBC SHROUDS™ ❸			
9a	AV-NBC Shroud with Installation Kit for AV-2000 Facepiece	1	805289-04	$ 259.60
9b	AV-NBC Shroud for AV-2000 Facepiece	1	805514-01	$ 229.15
10	AV-3000 NBC Shroud	1	31000558	$ 210.85

❶ Multi-Purpose Cartridge (805557-01) is NIOSH approved for use on the C420 PAPR. It is approved for use in atmospheres containing Ammonia (AM), Chlorine Dioxide (CD), Chlorine (CL), Formaldehyde (FM), Hydrogen Chloride (HC), Hydrogen Fluoride (HF), Methylamine (MA), Sulfur Dioxide (SO_2)and Dust, Mist and Fume Particulates (HEPA).

❷ No NIOSH Approval

❸ The AV-NBC SHROUD is NIOSH approved as an accessory

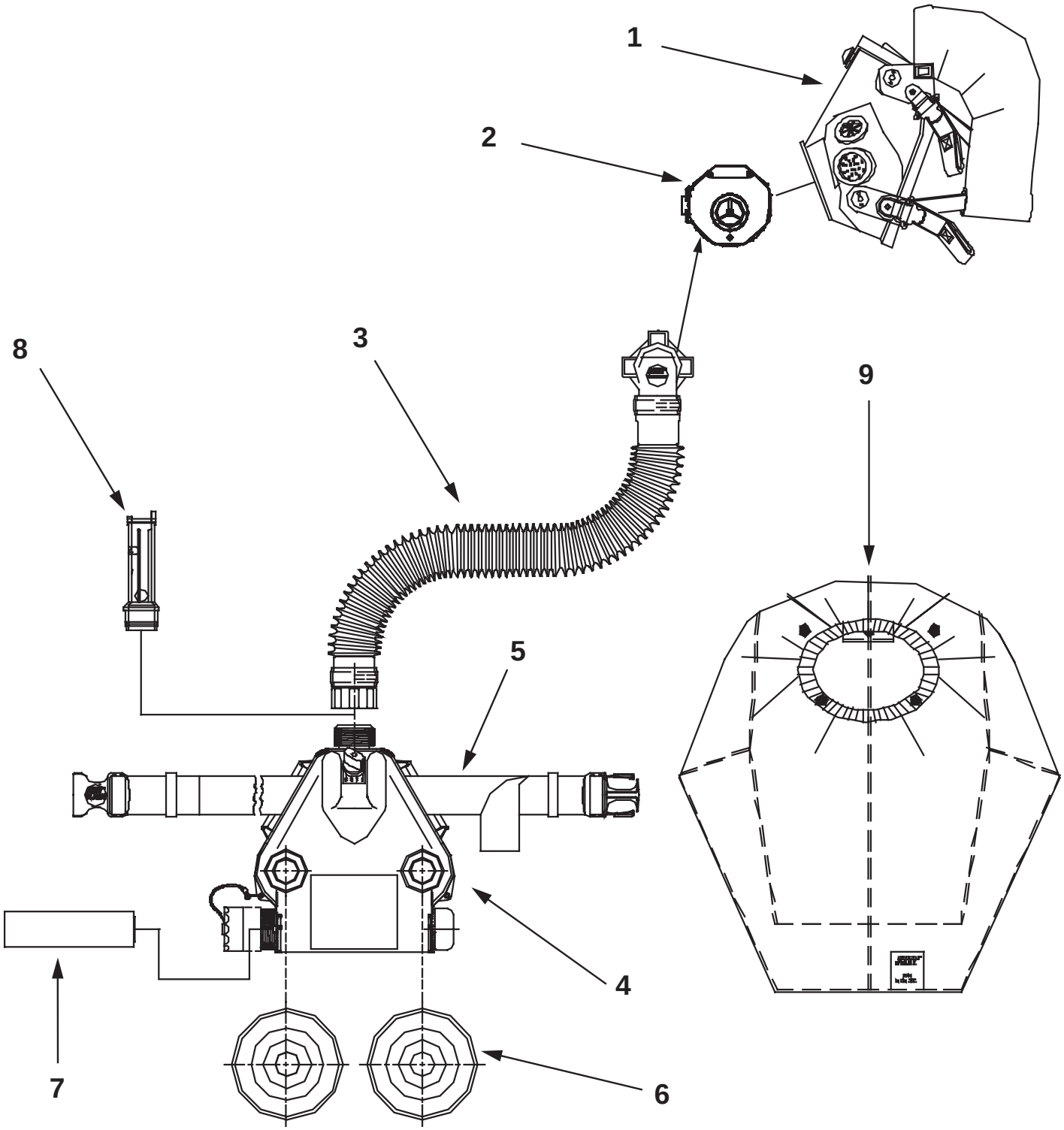
1
2
3
4
5
6
7
8
9

742 SERIES

FILTERS & CARTRIDGES

FastTrax

Select part numbers from this product line are part of the Scott Fast Trax Program. Contact your Regional Manager or Scott Customer Service for more details.

742 Series Twin Filter and Chemical Cartridges

Part Number	Description	Pieces Per Pkg	List Price
7422-WA1	Acid Gas	1 Pair	$ 8.60
7422-GA1	Ammonia/Methylamine	1 Pair	$ 9.80
7422-IA1	Formaldehyde	1 Pair	$ 11.90
7422-ZA1	Mercury Vapor/Chlorine Gas	1 Pair	$ 17.60
7422-BA1	Organic Vapor	1 Pair	$ 8.70
7422-WB1	Acid Gas/P100	1 Pair	$ 15.70
7422-GB1	Ammonia/Methylamine/P100	1 Pair	$ 17.10
7422-IB1	Formaldehyde/P100	1 Pair	$ 19.70
7422-ZB1	Mercury Vapor/Chlorine Gas/P100	1 Pair	$ 24.60
7422-BB1	Organic Vapor/P100	1 Pair	$ 15.60
7422-FP1	P100 Filter	1 Pair	$ 6.50
7422-FN5	N95 Filter	50 Pair	$ 114.40
7422-FR2	R95 Filter	25 Pair	$ 80.50
7422-SC1	Multi-Purpose	1 Pair	$ 9.50
7422-YC1	Organic Vapor/ Acid Gas	1 Pair	$ 9.20
7422-SD1	Multi-Purpose / P100	1 Pair	$ 17.90
7422-YD1	Organic Vapor / Acid Gas / P100	1 Pair	$ 16.70
7422-PD1	Triethylenediamine (TEDA) / P100	1 Pair	$ 20.70

742 PLUS Series Twin Filter and Chemical Cartridges

Part Number	Description	Pieces Per Pkg	List Price
7422-WC1	Acid Gas Plus	1 Pair	$ 9.00
7422-BC1	Ammonia / Methylamine Plus	1 Pair	$ 8.80
7422-GC1	Ammonia / Methylamine Plus	1 Pair	$ 10.40
7422-WD1	Acid Gas/P100 Plus	1 Pair	$ 16.60
7422-BD1	Organic Vapor / P100 Plus	1 Pair	$ 16.40
7422-GD1	Ammonia / Methylamine / P100 Plus	1 Pair	$ 18.10
7422-CDI	Tear Gas /P100	1 Pair	$ 18.70

642 SERIES

FILTERS & CARTRIDGES

FastTrax

Select part numbers from this product line are part of the Scott Fast Trax Program. Contact your Regional Manager or Scott Customer Service for more details.

642 Series Filter and Acccessories

Part Number	Description	Pieces Per Pkg	List Price
10010790	Filter Enclosure	1	$ 2.00
68214-01	Filter Holder	1	$ 3.60
805180-02	N95 Filter	30 Pair	$ 50.40

642 Series Twin Chemical Cartridges and Filters

Part Number	Description	Pieces Per Pkg	List Price
803669-02	Acid Gas	3 Pair	$ 28.70
803670-02	Ammonia / Methylamine	3 Pair	$ 29.75
803671-02	Organic Vapor	3 Pair	$ 28.70
803672-02	Organic Vapor / Acid Gas	3 Pair	$ 28.70
804661-02	P100 Filter	3 Pair	$ 35.50
804675-02	Multi-Purpose	3 Pair	$ 30.40
804901-02	Multi-Purpose With P100	3 Pair	$ 56.70
804990-02	Acid Gas With P100	3 Pair	$ 57.30
804991-02	Ammonia / Methylamine With P100	3 Pair	$ 57.30
804992-02	Organic Vapor With P100	3 Pair	$ 57.30
804993-02	Organic Vapor / Acid Gas With P100	3 Pair	$ 57.30
804994-02	Radioiodine Vapor / Chlorine With P100 (TEDA-P100)	3 Pair	$ 63.60
805115-02	Mercury Vapor / Chlorine With ESLI	3 Pair	$ 54.10
805116-02	Mercury Vapor / Chlorine With ESLI - P100	3 Pair	$ 79.80
803669-07	Acid Gas	30 Pair	$ 278.60
803670-07	Ammonia / Methylamine	30 Pair	$ 284.90
803671-07	Organic Vapor	30 Pair	$ 278.60
803672-07	Organic Vapor / Acid Gas	30 Pair	$ 278.60
804661-07	P100 Filter	30 Pair	$ 337.20
804675-07	Multi-Purpose	30 Pair	$ 283.60
804901-07	Multi-Purpose With P100	30 Pair	$ 551.80
804990-07	Acid Gas With P100	30 Pair	$ 548.40
804991-07	Ammonia / Methylamine With P100	30 Pair	$ 559.30
804992-07	Organic Vapor With P100	30 Pair	$ 548.40
804993-07	Organic Vapor / Acid Gas With P100	30 Pair	$ 548.40
804994-07	Radioiodine Vapor / Chlorine With P100 (TEDA-P100)	30 Pair	$ 618.20
805115-07	Mercury Vapor / Chlorine With ESLI	30 Pair	$ 509.40
805116-07	Mercury Vapor / Chlorine With ESLI - P100	30 Pair	$ 761.60

631 CHIN & 40MM

CANISTERS

Select part numbers from this product line are part of the Scott Fast Trax Program. Contact your Regional Manager or Scott Customer Service for more details.

631 Series Chin Canisters

Part Number	Description	Pieces Per Pkg	List Price
805046-02	Ammonia / Methylamine Canister	6	$ 168.55
805047-02	Chlorine Canister	6	$ 164.35
805037-02	Chlorine / P100,Canister	6	$ 215.35
805050-02	Organic Vapor/Acid Gas Canister w/R95 filter	6	$ 187.30
805048-02	Organic Vapor/Acid Gas /Ammonia Canister w/R95 filter	6	$ 184.15
805049-02	Organic Vapor Canister	6	$ 168.55
805038-02	Organic Vapor / P100 Canister	6	$ 215.35
805036-02	P100 Canister	10	$ 114.25
805039-02	TEDA / P100 Canister (Radioiodine Vapors/Chlorine Gas)	6	$ 243.40

40mm Series Canisters

Part Number	Description	Pieces Per Pkg	List Price
805557-01	MPC Plus Cartridge	1	$ 19.00
052683	P100 Cartridge	1	$ 9.10
045123	Enforcement Cartridge	1	$ 28.00

AV-2000®, AV-3000™ and Scott-O-Vista® Facepiece Accessories

Part Number	Description	Pieces Per Pkg	List Price
26977-01	AV-2000, SOV Facepiece Frame Mounting Hardware Kit	1	$ 12.20
803941-25	Lens Cover	25	$ 51.75
10010068	Multi-Wash Disinfectant, 16 oz. Bottle (Min. by: 6 pieces)	1	$ 10.50
10010304	Multi-Wash Disinfectant, 1 Gallon (Min. by: 4 pieces)	1	$ 62.20
805534-01	Facepiece Bag	1	$ 20.60
804442-01	AV-2000 Facepiece/SOV Facepiece Spec Kit	1	$ 45.20
805753-01	AV-3000 Facepiece Spec Kit	1	$ 42.35

FACEPIECE ADAPTERS

FOR CARTRIDGES & CANISTERS

FastTrax

Select part numbers from this product line are part of the Scott Fast Trax Program. Contact your Regional Manager or Scott Customer Service for more details.

Facepiece Adapters

Part Number	Description	Pieces Per Pkg	List Price
805622-01	742 Series Twin Cartridge 1/4 Turn Adapter Requires 742 series cartridges	1	$ 35.20
804057-01	642 Series Twin Cartridge V-Bar Adapter Requires 642 series cartridges	1	$ 35.20
804058-01	631 Series Chin Canister Adapter	1	$ 35.20
805059-01	40mm Cartridge Adapter	1	$ 35.20

FastTrax

Select part numbers from this product line are part of the Scott Fast Trax Program. Contact your Regional Manager or Scott Customer Service for more details.

Fit Testing Adapters

Quantitative Fit Tesing Device	Facepiece to be Fit Tested	Quantitative Fit Test Probe Adapter Required	Also Requires Use of
TSI Portacount®	Xcel Half Mask	7422-FT1	742 Series P100 Cartridges
	Promask 25	7422-FT1	742 Series P100 Cartridges
	AV-2000®, AV-3000™, Scott-O-Vista®, Weld-O-Vista™ Facepieces w/ Quarter Turn Adapter (805622-01) Installed	7422-FT1	742 Series P100 Cartridges
TSI Portacount	Model 66® Half Mask	805627-01	642 Series P100 Cartridges
	AV-2000®, AV-3000™, Scott-O-Vista®, Weld-O-Vista™ Facepieces w/ V-Bar Adapter (804057-01) Installed	805627-01	642 Series P100 Cartridges
TSI Portacount	Promask 40, M95	805628-01	40 mm P100 Cartridge
	AV-2000®, AV-3000™, Scott-O-Vista®, Weld-O-Vista™ Facepieces w/ 40 mm Adapter (805059-01) Installed	805628-01	40 mm P100 Cartridge
TSI Portacount	AV-2000®, AV-3000™, Scott-O-Vista®, Weld-O-Vista™ Facepieces w/ Quarter Turn Adapter (805622-01) Installed	805629-01	631 Series P100 Canister
TSI Portacount	C100 SCBA	2003468	40 mm P100 Cartridge

Quantitative Fit Tesing Device	Facepiece to be Fit Tested	Quantitative Fit Test	List Price Per Package
Fit Tester 3000	Xcel Half Mask	805816	$ 351.75
	Promask 25	805816	$ 351.75
	AV-2000®, AV-3000™, Scott-O-Vista®, Weld-O-Vista™ Facepieces w/ Quarter Turn Adapter (805622-01) Installed	805816	$ 351.75

Fit-Test Kit for AV-2000/AV-3000/Scott-O-Vista Facepiece Positive Pressure Applications (using TSI PortaCount)

Part Number	Description	Pieces Per Pkg	List Price
803930-01	Fit Test Kit including: 642 1/4 Turn Cartridge Adapter, Probe Assembly, 642 P100 Cartridge (1 Pair)	1	$ 65.00
803930-02	Fit Test Kit including: 40mm Adapter, Probe Assembly, One each of 40mm Cartridge	1	$ 65.00

BITREX®

QUALITATIVE FIT TEST KIT

Bitrex Qualitative Fit Test Kit

Part Number	Description	Pieces Per Pkg	List Price
2017070	Bitrex® Qualitative Fit Test Kit	1	$ 199.00

Fit Test Parts For Use With 742 Series Twin Cartridges

Part Number	Description	Pieces Per Pkg	List Price
805622-01	742 Series Twin Cartridge 1/4 Turn Adapter	1	$ 35.20
7422-FP1	P100 Filter, 742 Series	1	$ 6.50
7422-BA1	Organic Vapor Cartridges, 742 Series	1	$ 8.70

Fit Test Parts For Use With 642 Series Twin Cartridges

Part Number	Description	Pieces Per Pkg	List Price
804057-01	642 Series Twin Cartridge Adapter	1	$ 35.20
803671-02	642 Series Organic Vapor Twin Cartridges	3 Pair	$ 28.70
804661-02	642 Series Twin Cartridge P100 Filters	3 Pair	$ 35.50

Fit Test Parts and Accessories For Use With 631 Series Chin Canisters

Part Number	Description	Pieces Per Pkg	List Price
804058-01	631 Series Chin Canister Adapter	1	$ 35.20
805036-02	631 Series Chin Canister P100 Filter	10	$ 114.25
805049-02	631 Series Organic Vapor Chin Canister	6	$ 168.55

Fit Test Parts and Accessories For Use With 40mm Series Canisters

Part Number	Description	Pieces Per Pkg	List Price
805059-01	40mm Canister Adapter	1	$ 35.20
052683	40mm HEPA Cartridge	1	$ 9.10

SPEED-EVAC®

MOUTHBIT RESPIRATOR

FastTrax

Select part numbers from this product line are part of the Scott Fast Trax Program. Contact your Regional Manager or Scott Customer Service for more details.

Speed-Evac® 90 Series Mouthbit Respirators

Part Number	Description	Pieces Per Pkg	List Price
803834-01	Acid Gas, With Pouch	1	$ 19.90
803834-03	Acid Gas, With Case	1	$ 25.10
803834-30	Acid Gas, With Pouch	30	$ 569.45
803834-32	Acid Gas, With Case	30	$ 674.10
803839-01	Ammonia, With Pouch	1	$ 19.90
803839-03	Ammonia, With Case	1	$ 25.00
803839-30	Ammonia, With Pouch	30	$ 569.45
803839-32	Ammonia, With Case	30	$ 674.10

Speed-Evac 90 Series Mouthbit Respirators Part and Accessories

Part Number	Description	Pieces Per Pkg	List Price
10007992	Mouthbit Mouthpiece	1	$ 1.70
10007997	Mouthbit Noseclip	1	$ 1.40
10007998	Mouthbit Noseclip Pad	1	$ .20
10008002	Mouthbit Belt Clip	1	$ 2.65
10008212	Mouthbit Replacement Bag	1	$ 1.20
10008221	Mouthbit Belt Clip Retainer	1	$ 1.30
804192-01	Mouthbit Reusable Carrying Case	1	$ 14.00

CHARGE STATIONS

GUARDIAN & REVOLVEAIR®

Charge Stations Price Configurator

	Model	Price		Base	Price		Fill Panel	Price		Dual Pressure	Price		Auxiliary Low Pressure	Price		Auxiliary High Pressure	Price		Cutout	Price			Cascade Panel	Price			Options	Price
						0	None	N/C													0	0	None	N/C				
1	Guardian (Blue / White)	5,165	1	Yes	N/C	1	Stationary	530	1	Yes	1,430	1	Yes	822	1	Yes	928	1	Yes	N/C					0	1	CGA Adapter	N/C
2	RevolveAir (Blue / White)	6,220	2	No	N/C	2	Mobile	530	2	No	N/C	2	No	N/C	2	No	N/C	2	No	N/C	0	2	2 Bank	850	0	2	DIN Adapter	N/C
3	RevolveAir Mobile (Red / White)	6,220																			0	3	3 Bank	1,190	1	1	SCUBA Adapter/ RevolveAir & CGA	260
																					0	4	4 Bank	1,490	2	1	SCUBA Adapter/ Guardian & CGA	121
																					0	5	5 Bank	1,778	1	2	SCUBA Adapter/ RevolveAir & DIN	260
																					0	6	6 Bank	2,067	2	2	SCUBA Adapter/ Guardian & DIN	121
																					0	8	8 Bank	2,920				
																					A	2	Auto 2					
																					A	3	Auto 3					
																					A	4	Auto 4					

Part Number:
Select one number per box from the chart above that corresponds to your choice

AF											

Price:
Select the price that corresponds to the number selected above

Total:
Add up all prices to the left

Example

RevolveAir Mobile;
with No Base;
with Mobile Fill Panel;
with Dual Pressure;
with Auxiliary Low Pressure;
with No Auxiliary High Pressure;
with Cutout;
with 5 Bank Cascade Panel;
with SCUBA Adapter / RevolveAir & CGA

AF	3	2	2	1	1	2	1	0	5	1	1
	$6,220	$0	$530	$1,430	$822	$0	$0	$1,778		$260	

$11,040

This price configurator is a guide to Scott's breathing air systems product part numbers. Not all part numbers configured with this chart can be manufactured. Please confirm part numbers with Scott's Customer Service Department, a Scott Regional Manager, or your local Scott Authorized Distributor of breathing air systems.

COMPRESSORS

SIMPLE AIR & HUSH AIR

Stationary & Horizontal Compressors Price Configurator

	Model	Price		Voltage/Phase/Hz	Price		Horsepower	Price		Controller	Price		Frame	Price		Color	Price		Language	Price		Options	Price
																					0	None	N/C
0	1 Simple Air / 5000 psi / 1 Phase	10,600	0	1 208 Volt / 1 Phase/ 60Hz	N/C	1	5 HP	220	1	Basic	N/C	1	Open	N/C	1	Blue/White	N/C	1	English	N/C	1	Wall Mount	N/C
0	2 Simple Air / 5000 psi / 3 Phase	10,826	0	2 230 Volt / 1 Phase/ 60Hz	N/C	2	7.5 HP	300	2	CO Monitor	2,000	2	Simple Enclosed	2,000	2	Red/White	N/C	2	Spanish	N/C	2	Moisture Indicator	200
0	3 Simple Air / 6000 psi / 1 Phase	16,369	0	3 208 Volt / 3 Phase/ 60Hz	N/C	3	10 HP	900	3	Dew Point	1,300	3	Hush Enclosed	2,200				3	French	N/C	3	Wall Mount w/ Moisture Indicator	200
0	4 Simple Air / 6000 psi / 3 Phase	16,029	0	4 230 Volt / 3 Phase/ 60Hz	N/C	4	15 HP	1,000	4	CO & Dew Point	3,300	4	Open/ Remote Air In	98				4	German	N/C			
0	5 Hush Air / 6000 psi	23,656	0	5 460 Volt / 3 Phase/ 60Hz	N/C	5	20 HP	1,200	5	CO monitor withCalKit	2,240	5	Simple Enclosed/ Remote Air	2,098				5	Italian	N/C			
0	6 Horizontal / 6000 psi / 7.5 & 10	16,029	0	6 220 Volt / 3 Phase/ 50Hz	N/C	6	30 HP	26,944	6	CO/DewPoint with CalKit	3,540	6	Hush Enclosed/ Remote Air	2,450				6	Mandarin	N/C			
0	7 Horizontal / 6000 psi / 15 & 20	23,656	0	7 380 Volt / 3 Phase/ 50Hz	N/C																		
			0	8 440 Volt / 3 Phase/ 50Hz	N/C																		

Part Number:
Select one number per box from the chart above that corresponds to your choice

AC										

Price:
Select the price that corresponds to the number selected above

Total:
Add up all prices to the left

Example

Simple Air / 6000 psi / 3 Phase Model
with 230 Volt / 3 Phase / 60 Hz;
with 10 HP;
with CO & Dew Point Controller;
with Simple Enclosed Frame;
with Blue/White Color;
in Italian;
with no Options

AC	0	4	0	4	3	4	2	1	5	0
	$16,369		$0		$900	$3,300	$2,000	$0	$0	$0

$22,569

This price configurator is a guide to Scott's breathing air systems product part numbers. Not all part numbers configured with this chart can be manufactured. Please confirm part numbers with Scott's Customer Service Department, a Scott Regional Manager, or your local Scott Authorized Distributor of breathing air systems.

LIBERTY DUAL POWER

LIBERTY I, II & SLIP-IN

Liberty Dual Power Price Configurator

Model		Price	HP/Voltage/Phase/Hz			Price	Brakes Tow Hitch		Price	Light Tower Generator		Price	Cold Weather Package		Price	Color*		Price	Pressure Reel High & Low		Price	SCBA Storage Rack		Price	Language		Price	Options		Price
							0	None	N/C	0	None	N/C							0	None	N/C							0	None	
1	Liberty I	69,657	0	1	20HP/ 208 Volt/ 3 Phase/ 60Hz	N/C	1	Surge/Ball	N/C	1	Light/Gen	2,254	1	Yes	1,179	1	Red	N/C	1	Low	3,414	1	Yes	2,595	1	English	N/C	1	Din	N/C
2	Liberty II	73,541	0	2	20HP/ 230 Volt/ 3 Phase/ 60 HZ	N/C	2	Electric/Ball	716	2	Gen/No Light	1,168	2	No		2	Other	2,500	2	High	4,568	2	No	N/C	2	Spanish	N/C	2	STD with CalKit	200
3	Liberty Slip-In	57,908	0	3	20HP/ 460 Volt/ 3 Phase/ 60 HZ	N/C	3	Surge/Pintel	N/C										3	Low & High	7,982				3	French	N/C	3	DiN with CalKit	200
4	Liberty Slip-In (Open Frame)	52,584	0	4	20HP/ 220 Volt/ 3 Phase/ 50 HZ	N/C	4	Electric/Pintel	716																4	German	N/C	4	STD/SCUBA	216
			0	5	20HP/ 380 Volt/ 3 Phase/ 50 HZ	N/C	5	Surge/Ball/Spare	500																5	Italian	N/C	5	DIN/SCUBA	216
			0	6	20HP/ 440 Volt/ 3 Phase/ 50 HZ	N/C	6	Electric/Ball/Spare	1,216																6	Mandarin	N/C	6	STD/SCUBA/ CalKit	460
							7	Surge/Pintel/Spare	500																			7	DIN/SCUBA/ CalKit	460
							8	Electric/Pintel/Spare	1,216																					

Part Number:
Select one number per box from the chart above that corresponds to your choice

AL											

Price:
Select the price that corresponds to the number selected above

Total:
Add up all prices to the left

*For special order colors, there is an upcharge of $2,500 (RAL# needed)

Example

Liberty I Model;
with 20HP / 220 Volt/ 3 Phase / 50Hz;,
with Electric Brakes and Ball Hitch;
with no Light Tower or Generator;
with a Cold Weather Package;
in Red;
with High Pressure Reel;
with no Storage Rack;
in English;
with no Options

AL	1	0	4	2	0	1	1	2	0	1	0
	$69,757	$0		$716	$0	$1,179	$0	$4,568	$0	$0	$0

$76,220

This price configurator is a guide to Scott's breathing air systems product part numbers. Not all part numbers configured with this chart can be manufactured. Please confirm part numbers with Scott's Customer Service Department, a Scott Regional Manager, or your local Scott Authorized Distributor of breathing air systems.

EASY AIR

ELECTRIC & GAS

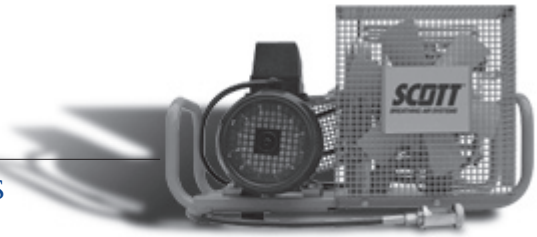

Easy Air Compressor Price Configurator

Model		Price	HP / Voltage / Phase / Hz			Price	Stop Pressure		Price	Options			Price
			0	0	None					0	0	None	
1	Electric	3,258	0	1	3HP / 115 Volt / 1 Phase / 60 Hz	N/C	1	3000 psi / 206 bar	N/C	0	1	CGA Adapter with 6 ft. hose	320
2	Gas	3,800	0	2	3HP / 230 Volt / 1 Phase / 50 Hz	N/C	2	3500 psi / 240 bar	N/C	0	2	DIN Adapter with 6 ft. hose	320
			0	3	3HP / 230 Volt / 1 Phase / 60 Hz	N/C	3	4000 psi / 275 bar	N/C	0	3	SCUBA Adapter with 6 ft. hose	320
			0	4	4HP / 230 Volt / 3 Phase / 50 Hz	N/C	4	4500 psi / 310 bar	N/C				
			0	5	4HP / 230 Volt / 3 Phase / 60 Hz	N/C	5	5000 psi / 345 bar	N/C				
			0	6	4HP / 400 Volt / 3 Phase / 50 Hz	N/C							
			0	7	4HP / 400 Volt / 3 Phase / 60 Hz	N/C							

Part Number:
Select one number per box from the chart above that corresponds to your choice

AE						

Price:
Select the price that corresponds to the number selected above

Total:
Add up all prices to the left

Example

Electric Easy Air Compressor Model
with 3HP / 115 Volt / 1 Phase / 60Hz;
with 3500 psi / 206 bar;
with DIN Adapter with 6 ft. hose Option

AE	1	0	1	2	0	2
	$3,258	$0		$0	$320	

$3,578

This price configurator is a guide to Scott's breathing air systems product part numbers. Not all part numbers configured with this chart can be manufactured. Please confirm part numbers with Scott's Customer Service Department, a Scott Regional Manager, or your local Scott Authorized Distributor of breathing air systems.

STORAGE & RACKS

HORIZONTAL & VERTICAL

Storage & Racks Price Configurator

Cylinder Type		Price	Quantity			Price (ASME 6000 psi)	Price (DOT 4500 psi)	Price (DOT 5000 psi)	Price (DOT 6000 psi)	Rack		Price	Plumbing & Quality			Price	Hoses			Price	Options		Price
0	None	N/C	0	0	None	N/C	N/C	N/C	N/C	0	None	N/C	0	0	None	N/C	0	0	None	N/C	0	None	N/C
1	ASME 6000 psi	N/C	0	1	One	2,205	600	800	1,090	1	Wall 2	180	B	1	1 Bulk	N/C	1	0	10 ft.	N/C			
2	DOT 4500 psi	N/C	0	2	Two	4,410	1,200	1,600	2,180	2	Wall 4	260	B	2	2 Bulk	N/C	1	5	15 ft.	N/C			
3	DOT 5000 psi	N/C	0	3	Three	6,615	1,800	2,400	3,270	3	Vertical Back 2	1,134	B	3	3 Bulk	N/C	2	0	20 ft.	N/C			
4	DOT 6000 psi	N/C	0	4	Four	8,820	2,400	3,200	4,360	4	Vertical Back 4	1,500	B	4	4 Bulk	N/C	2	5	25 ft.	N/C			
			0	5	Five	11,025	3,000	4,000	5,450	5	Vertical Stand Alone 2	1,134	B	5	5 Bulk	N/C	3	0	30 ft. added cost	221			
			0	6	Six	13,230	3,600	4,800	6,540	6	Vertical Stand Alone 4	1,500	B	6	6 Bulk	N/C	4	0	40 ft. added cost	290			
			0	7	Seven	15,435	4,200	5,600	7,630	7	Horizontal 2	1,200	C	2	2 Cascade	100	5	0	50 ft. added cost	360			
			0	8	Eight	17,640	4,800	6,400	8,720	8	Horizontal 4	1,350	C	3	3 Cascade	150	6	0	60 ft. added cost	430			
			0	9	Nine	19,845	5,400	7,200	9,810	9	Horizontal 6	1,675	C	4	4 Cascade	200	7	0	70 ft. added cost	499			
			1	0	Ten	22,050	6,000	8,000	10,900				C	5	5 Cascade	250	8	0	80 ft. added cost	568			
													C	6	6 Cascade	300	9	0	90 ft. added cost	638			
													C	7	7 Cascade	350							
													C	8	8 Cascade	400							

Part Number:
Select one number per box from the chart above that corresponds to your choice

AR									

Price:
Select the price that corresponds to the number selected above

Total:
Add up all prices to the left

Example

DOT 5000 psi Model
Four Quantity;
with Wall4 Rack;
with 4 Bulk Plumbing;
with 20 Foot Hose;
with no Options

AR	3	0	4	2	B	4	2	0	0
	$0	$3,200		$260	$0		$0		$0

$3,460

This price configurator is a guide to Scott's breathing air systems product part numbers. Not all part numbers configured with this chart can be manufactured. Please confirm part numbers with Scott's Customer Service Department, a Scott Regional Manager, or your local Scott Authorized Distributor of breathing air systems.

SCOUT®

PORTABLE GAS DETECTION INSTRUMENT

Plated Scout

Scout Kit Ordering Notes:
All Scout kits include a manual, leather instrument holster, and a shoulder strap.
Plated Scout instruments and battery have nickel plated ABS housing.
Value Case – Blow molded economical case to carry instrument, calibration gas, and accessories.
Premium Case - Peilican foam lined case to carry instrument, calibration gas, regulator and accessories.
Alkaline – Instrument includes (3) C cell alkaline battery pack (batteries are included).
Pump, probe and tubing- Instrument includes a .5 lpm internal pump that is powered by the instrument, 10 feet of clear sample tubing, and a clear 12" probe with replaceable internal particulate and hydrophobic filters.
Cal Kit- Calibration kits include 2 feet of tubing, calibration gas and a regulator, kits that ship with premium carry cases include and on/off valve and pressure gauge. Other kits include a bullet style regulator that initiates flow when installed on the calibration gas cylinder.

Part Number	# of Gas(s)	Gas(s) Detected	Value Case	Premium Case	Li-Ion + Charger	Alkaline	Pump, probe and tubing	Cal Kit	List Price
096-2561-37	5	PID/O_2/CO/H_2S/LEL		●		●	●	●	$3,925.00
096-2561-40	5	PID/O_2/CO/H_2S/LEL		●	●		●	●	$4,518.00
096-2561-43	5	PID/O_2/CO/H_2S/LEL		●	●	●	●	●	$4,888.00
096-2561-44	5	PID/O_2/CO/H_2S/LEL				●	●		$3,200.00
096-2561-47	5	PID/O_2/CO/H_2S/LEL			●		●		$3,793.00
096-2561-66	5	PID/O_2/CO/H_2S/LEL				●			$2,153.00
096-2561-67	5	PID/O_2/CO/H_2S/LEL	●			●		●	$2,581.00
096-2561-68	5	PID/O_2/CO/H_2S/LEL				●	●		$2,358.00
096-2561-69	5	PID/O_2/CO/H_2S/LEL	●			●	●	●	$2,786.00
096-2561-70	5	PID/O_2/CO/H_2S/LEL			●				$2,456.00
096-2561-71	5	PID/O_2/CO/H_2S/LEL	●		●			●	$2,884.00
096-2561-72	5	PID/O_2/CO/H_2S/LEL			●		●		$2,661.00
096-2561-73	5	PID/O_2/CO/H_2S/LEL	●		●		●	●	$3,027.00
096-2561-01	4	O_2/CO/H_2S/LEL	●			●	●	●	$1,843.00
096-2561-05	4	O_2/CO/H_2S/LEL		●		●	●	●	$2,048.00
096-2561-09	4	O_2/CO/H_2S/LEL		●	●		●	●	$2,641.00
096-2561-13	4	O_2/CO/H_2S/LEL		●	●	●	●	●	$3,011.00

Part Number	# of Gas(s)	Gas(s) Detected	Value Case	Premium Case	Li-Ion + Charger	Alkaline	Pump, probe and tubing	Cal Kit	List Price
096-2561-14	4	O_2/CO/H_2S/LEL				●	●		$1,463.00
096-2561-18	4	O_2/CO/H_2S/LEL			●		●		$2,056.00
096-2561-22	4	O_2/CO/H_2S/LEL				●			$1,230.00
096-2561-26	4	O_2/CO/H_2S/LEL			●				$1,823.00
096-2561-30	4	O_2/CO/H_2S/LEL			●*		●		$1,600.00
096-2561-02	3	O_2/CO/LEL	●			●	●	●	$1,538.00
096-2561-03	3	O_2/H_2S/LEL	●			●	●	●	$1,683.00
096-2561-06	3	O_2/CO/LEL		●		●	●	●	$1,743.00
096-2561-07	3	O_2/H_2S/LEL		●		●	●	●	$1,888.00
096-2561-10	3	O_2/CO/LEL		●	●		●	●	$2,336.00
096-2561-11	3	O_2/H_2S/LEL		●	●		●	●	$2,481.00
096-2561-15	3	O_2/CO/LEL				●	●		$1,303.00
096-2561-16	3	O_2/H_2S/LEL				●	●		$1,303.00
096-2561-19	3	O_2/CO/LEL			●		●		$1,896.00
096-2561-20	3	O_2/H_2S/LEL			●		●		$1,896.00
096-2561-23	3	O_2/CO/LEL				●			$1,070.00
096-2561-24	3	O_2/H_2S/LEL				●			$1,070.00
096-2561-27	3	O_2/CO/LEL			●				$1,663.00
096-2561-28	3	O_2/H_2S/LEL			●				$1,663.00
096-2561-38	3	PID/O_2/LEL		●		●	●	●	$3,560.00
096-2561-41	3	PID/O_2/LEL		●	●		●	●	$4,153.00
096-2561-45	3	PID/O_2/LEL				●	●		$2,900.00
096-2561-48	3	PID/O_2/LEL			●		●		$3,493.00
096-2561-29	2	O_2/LEL			●				$1,503.00
096-2561-25	2	O_2/LEL				●			$910.00
096-2561-21	2	O_2/LEL			●		●		$1,736.00
096-2561-17	2	O_2/LEL				●	●		$1,143.00
096-2561-12	2	O_2/LEL		●	●		●	●	$2,146.00
096-2561-08	2	O_2/LEL		●		●	●	●	$1,553.00
096-2561-04	2	O_2/LEL	●			●	●	●	$1,348.00
096-2561-49	1	PID ONLY			●		●		$3,223.00
096-2561-46	1	PID ONLY				●	●		$2,630.00
096-2561-42	1	PID ONLY		●	●		●	●	$3,658.00
096-2561-39	1	PID ONLY		●		●	●	●	$3,065.00

STEALTH SCOUT®

PORTABLE GAS DETECTION INSTRUMENT

Black Scout

Scout Kit Ordering Notes:
All Scout kits include a manual, leather instrument holster, and a shoulder strap.
Black Scout instruments and battery have unplated ABS housing.
Value Case – Blow molded economical case to carry instrument, calibration gas, and accessories.
Alkaline – Instrument includes (3) C cell alkaline battery pack (batteries are included).
Pump, probe and tubing- Instrument includes a .5 lpm internal pump that is powered by the instrument, 10 feet of clear sample tubing, and a clear 12" probe with replaceable internal particulate and hydrophobic filters.
Cal Kit- Calibration kits include 2 feet of tubing, calibration gas and a regulator, kits that ship with premium carry cases include and on/off valve and pressure gauge. Other kits include a bullet style regulator that initiates flow when installed on the calibration gas cylinder.

Part Number	# of Gas(s)	Gas(s) Detected	Value Case	Li-Ion + Charger	Alkaline	Pump, probe & tubing	Cal Kit	List Price
096-2561-61	4	O_2/CO/H_2S/LEL	●		●	●	●	$1,480.00
096-2561-60	4	O_2/CO/H_2S/LEL			●	●		$1,130.00
096-2561-59	4	O_2/CO/H_2S/LEL	●		●		●	$1,270.00
096-2561-58	4	O_2/CO/H_2S/LEL			●			$915.00
096-2561-53	2	O_2/LEL	●		●	●	●	$1,100.00
096-2561-52	2	O_2/LEL			●	●		$920.00
096-2561-51	2	O_2/LEL	●		●		●	$950.00
096-2561-50	2	O_2/LEL			●			$700.00

SCOUT®

BUILDING A SCOUT

Building a Scout: SCT # AA BB CC DD EE FF GG HH II JJ

AA- Battery Options		
10	Scout with Alkaline Battery	$ 570.00
11	Scout with Lithium Battery	$ 707.00
12	Scout with Alkaline Battery, Sampling Pump, Probe, Tubing	$ 803.00
13	Scout with Lithium Battery, Sampling Pump, Probe, Tubing	$ 940.00
14	Black Stealth Scout with Alkaline Battery	$ 424.00
15	Black Stealth Scout with Alkaline Battery, Sampling Pump, Probe and Tubing	$ 620.00

BB - Charging Options		
99	No Charger	N/C
10	90-264 VAC Charger	$ 456.00
11	12 VDC Charger	$ 456.00

The following kits include alkaline battery pack and add internal pump, probe and tubing.

CC/DD/EE/FF - Sensors		
99	No Sensor	N/C
01	Oxygen Sensor	$ 120.00
02	CO Sensor	$ 160.00
03	H_2S Sensor	$ 160.00
05	NH_3 Sensor	$ 350.00
06	SO_2 Sensor	$ 300.00
07	PH_3 Sensor	$ 350.00
09	HCN Sensor	$ 300.00
10	NO_2 Sensor	$ 300.00
11	NO Sensor	$ 300.00
12	CO/H_2S Sensor (Dual Toxic) Position EE Only	$ 250.00
13	Combustible Sensor, Standard Position FF Only	$ 150.00
14	Combustible Sensor, Triple Range. Position FF Only	$ 200.00
27	PID Sensor	$ 1,700.00
30	CO_2 IR Sensor	$ 430.00

CC - Holster/Boots		
99	No Boots or Holster	N/C
01	Rubber Boot	$ 45.00
02	Leather Boot w/ Shoulder Strap	$ 70.00
03	E-Z Find Safety Yellow Boot w/ Shoulder Strap	$ 90.00

HH - Datalogging		
99	Internal Data Log Board (Standard)	N/C
10	PC-Charger Cable	$ 10.00
11	Transceiver	$ 140.00
12	IRIS Manager Software Only	$ 200.00
13	IRIS Manager Software w/ PC-Charger Cable	$ 210.00
14	IRIS Manager Software with Transceiver	$ 340.00

II - Carrying Cases		
99	No case	N/C
01	Value case	$ 80.00
02	Premium Case (STD)	$ 210.00
03	Premium Case (Multi Gas / PID)	$ 210.00

JJ - Calibration Regulators and Kits		
99	No regulator	N/C
16	2AL .5 LPM regulator w/ gauge, tubing & 34L LEL/CO/H_2S	$ 375.00
17	8AL .5 LPM regulator w/ gauge, tubing & 58L LEL/CO/H_2S	$ 420.00
18	7HP .5 LPM regulator w/ gauge, tubing & 34L LEL/CO	$ 230.00
19	6D .5 LPM regulator w/ gauge, tubing & 103L LEL/CO	$ 330.00
20	2AL .5 LPM regulator w/ gauge, tubing & 34L LEL/H_2S	$ 375.00
21	8AL .5 LPM regulator w/ gauge, tubing & 58L LEL/H_2S	$ 420.00
22	2AL Demand Flow regulator w/ tubing & 34L LEL/CO/H_2S	$ 565.00
23	8AL Demand Flow regulator w/ tubing & 58L LEL/CO/H_2S	$ 610.00
24	7HP Demand Flow regulator w/ tubing & 34L LEL/CO	$ 420.00
25	6D Demand Flow regulator w/ tubing & 103L LEL/CO	$ 520.00
26	2AL Demand Flow regulator w/ tubing & 34L LEL/H_2S	$ 585.00

Replacement Sensors

Part Number	Description	List Price
096-2522	O_2 Sensor (Oxygen)	$ 120.00
096-2523	CO Sensor (Carbon Monoxide)	$ 160.00
096-2524	H_2S Sensor (Hydrogen Sulfide)	$ 160.00
096-2526	NH_3 Sensor (Ammonia)	$ 350.00
096-2527	SO_2 Sensor (Sulfur Dioxide)	$ 300.00
096-2528	Value2 ™ Carbon Monoxide / Hydrogen Sulfide	$ 300.00
096-2529	PH_3 Sensor (Phosphine)	$ 350.00
096-2531	HCN Sensor (Hydrogen Cyanide)	$ 300.00
096-2532	NO_2 Sensor (Nitrogen Dioxide)	$ 300.00
096-2533	NO Sensor (Nitrogen Oxide)	$ 300.00
096-2534	Combustible Sensor for Scout	$ 150.00
	Combustible Dual Range Sensor [LEL & % gas] NOTE: This sensor requires Scout software version 3.11 or higher (see Scout display during start up). Please contact your distributor for software upgrade	$ 200.00
096-2960	PID Replacement sensor	$ 1,700.00
096-3223	IR CO_2 Sensor	$ 430.00
074-0407	Dummy sensor plug	$12.00

Scout PID Upgrade Modules

Use these modules to upgrade your old version Scout to allow a PID sensor to be used. These modules are comprised of a base housing, main pcb, and LCD. Simply attach old version Intellishutter assembly, battery pack, and (non-PID) sensors.

Part Number	Description	List Price
096-3068-2	PID Upgrade Module with IR datalog	$ 510.00
096-3068-4	PID Upgrade Module with IR datalog INCLUDES PID SENSOR	$ 2,210.00

Battery Packs & Chargers

Part Number	Description	List Price
028-0037	120 / 240v AC Adapter for lithium ion battery charger includes U.S. style power plug	$ 76.00
032-2554	Fuse, Replacement for 12v DC Car Adaptor 3 amp slow-blow 3A6	$ 1.00
077-0384	Replacement cord for charger [replaces USA 120v AC plug], European plug	$ 5.00
077-0385	Replacement cord for charger [replaces USA 120v AC plug], UK plug	$ 5.00
096-2502	Fleet Charger for 5 Scouts, Fast 3 hour re-charge, 120v AC - no mounting brackets. [downloading can only be done in position #1]	$ 1,620.00
096-2540	Li-Ion Battery Pack (No Charger)	$ 297.00
096-2560	Alkaline Battery Pack	$ 160.00
096-2581	90-264v AC Cradle Charger Kit (includes single charging cradle and power supply cable) - data cable (077-0316) should be purchased separately. Separate wall/truck mount bracket available. See 096-2883	$ 456.00
096-2582	12v DC Car Charger Kit (includes single charging cradle and plug-in cable) Separate wall/truck mount bracket available. See 096-2883	$ 456.00
096-2883	Wall and Truck Mount Bracket - attaches to single charging cradle	$ 48.00
096-2915	Fleet Charger for 5 Scouts, Fast 3 hour re-charge, 120VAC - includes aluminum brackets for desktop mounting. [downloading can only be done in postion #1]	$ 1,840.00
096-3185	Black Alkaline Battery Pack	$ 160.00

Sampling - Pumps, Probes, and Filters

Part Number	Description	List Price
096-2553	Flue Gas Probe	$ 184.00
068-0024	Coiled FEP tubing, 10 ft, 3/8" ID, [use for VOCs (PID), ammonia, phosphine, hydrogen cyanide	$ 25.00
077-0292	Acrylic Probe Parts- Probe Filter Cup	$ 9.00
077-0293	Acrylic Probe Parts- Probe Handle (lower)	$ 15.00
077-0294	Acrylic Probe Parts- Probe Hex nut compression fitting	$ 6.00
077-0295	Acrylic Probe Parts- Interchangeable probe tube	$ 9.00
077-0296	Acrylic Probe Parts- Probe compression sleeve	$ 2.00
077-0297	Acrylic Probe Parts- Probe O-ring	$ 2.00
077-0298	100 particulate filters for 12" probe	$ 35.00
077-0299	Acrylic Probe Parts- Probe Handle	$ 13.00
077-0317	Hydrophobic filter, 1 micron, for 12" probe	$ 6.00
077-0322	Internal Scout Disk Filters - used inside Scout to protect sensor array and pump	$ 3.00
093-0148	12" probe w/ hydrophobic and particulate filter	$ 63.00
093-0241	100 particulate filters for 12" probe [see part# 077-0298]	
093-0366	Manifold Paper Filter w/ adhesive backing (fits over rubber manifold gasket Prt# 096-2516)	$ 6.00
096-2551	30" Barholing Probe - Brass [Used in conjunction with Scouts configured with % Gas sensor. This brass probe has 1/4" OD tubing which will fit into smaller holes punched into the ground.]	$ 110.00
096-2552	Bar Hole Probe; polycarbonate	$ 100.00
096-2553	10" Flue Gas Probe - a heat-sinked probe for taking gas samples near combustion sources.	$ 170.00
096-2860	Dilution Orifice - required when sample measuring combustible gases in an area which contains less than 13% oxygen. The dilution orifice mixes the sample with ambient air. To utilize this system the Scout must be equipped with a pump and combustible sensor.	$ 275.00
096-2862-1	Petroleum Vapor Filter -Disposable -reccommended for use when sampling hydrocarbon vapors.Filters out petroleum-based vapors (such as gasoline) allowing gas (leaks) from hydrocarbon vapors (such as natural gas or propane) to be read	$ 38.00
096-2862-2	Flue Gas Filter - filter removes interfering gases, such as nitric oxide (NO). The filter media can be replaced when depleted. The Flue gas filter would be placed inline between your probe and the Scout in the sample tubing.	$ 38.00
096-2957	Replacement Charcoal for Petroleum Filter [096-2862-1]; 1 lb can (~1000 refills)	$ 10.00
096-3061	Acrylic Probe with 10 ft Coiled FEP tubing, 1/8" ID, [use for VOCs (PID), ammonia, phosphine, hydrogen cyanide	$ 100.00
077-0021	3/16 ID Clear Flexible (Tygon) Tubing	$ 1.60 /ft
096-3168	Tygon tubing in 2ft length	$ 3.20
096-3167	Tygon tubing in 10ft length	$ 16.00
096-2516	Sensor manifold membrane	$ 11.00
096-3001	Pump cleaning kit (tubing, syringe, screwdriver)	$ 20.00
096-2968	Pump cleaning power supply	$ 20.00

Auto Calibration Docking System and Datalog Communications

Part Number	Description	List Price
077-0316	Data cable Scout charger to PC serial port	$ 10.00
096-3003	I.R.I.S. Software (Full Version)	$ 200.00
096-3023	IRIS Docking Station Telephone-Based Start-Up Assistance - call for details	$ 75/hr.
096-2566	Auto-Calibration Docking System PC (includes MS-Windows Operating System, IRIS Full software, Modem, Network card). Master Docking Cradle, Slave cradle(s) and Expansion Kit purchased separately. [Monitor, keyboard, and mouse sold separately]. Automated Ammonia (NH3) calibration can only be performed on a single cradle system. Long tubing runs cause inaccurate calibration on multicradle systems	$ 4,299.00
096-2567	Master Docking Cradle - The master cradle is the primary cradle for either a single or mult-cradle Auto-Calibration Docking System. Includes the PIR power cable.	$ 2,099.00
096-2874	Slave Docking Cradle - Up to four Slave Cradles can be connected to a "Master" cradle. Includes PIR power cable. Includes all tubing and cables. Automated Ammonia (NH3) calibration can only be performed on a single cradle system. Long tubing runs cause inaccurate calibration on multicradle systems	$ 1,200.00
096-2882	Auto Calibration System Expansion Kit - includes all necessary parts to expand from a single cradle system to a multi-cradle system. Includes:Expansion Box, DIO Board, and cabling. NOTE: Slave Cradles purchased separately. NOTE: Automated Ammonia (NH3) calibration can only be performed on a single cradle system. Long tubing runs cause inaccurate calibration on multicradle systems	$ 1,318.00
096-2881	Factory Calibration Gas Port Software Pre-Configuration Service - Auto-calibration software requires each gas port to be assigned to the proper gas type. Scott Instruments can pre-configure these ports to customer specification prior to shipment of the Scout Auto calibration Docking System PC.	$ 150.00
077-0315	Scout IRDa Transceiver - connects to a PC's DB9 serial connector. Used for transferring datalog from a Scout to a PC.	$ 140.00
096-2509	Scout Datalogging PC Board - installs in the Scout and is used with either a IRDa Transceiver, Lithium ion Recharging Cradle, or an Auto-Calibration Cradle	$ 200.00

I.R.I.S. Charging, Communications, & Calibration

Datalogging with an IrDA Transciever

Any properly equipped Scout can datalog.

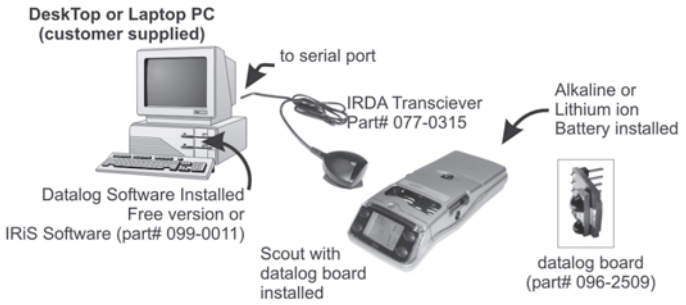

Lithium Ion Charger with Datalogging

Only For Instruments Equipped With Lithium Ion Batteries

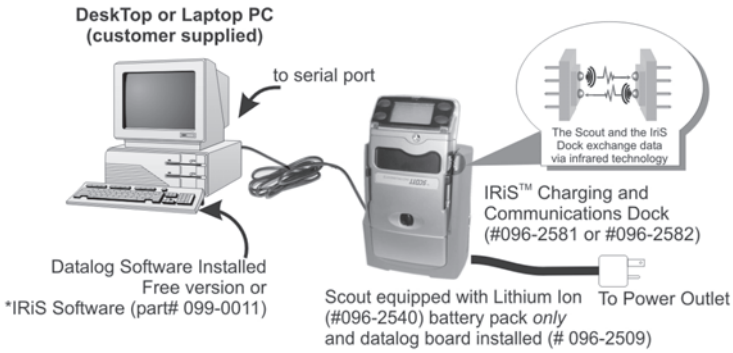

Auto-Calibration Docking System with Datalogging

The Scout Docking Calibration system automatically downloads instrument records and calibrates all sensors.

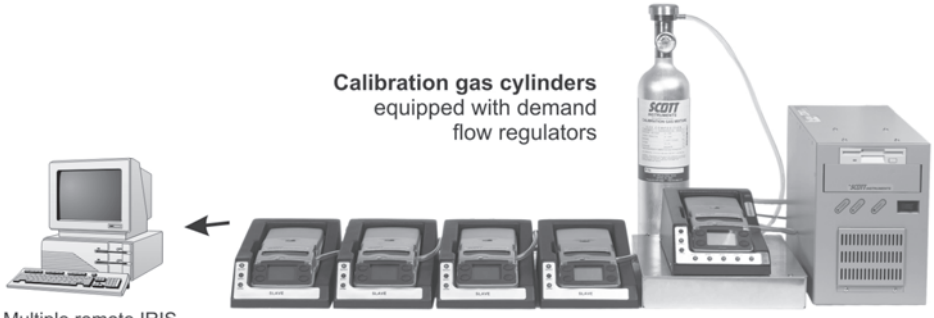

Industrial PC
System does not require a keyboard, mouse or monitor (not included) except for initial setup.
- Windows OS
- *IRIS Software
- DIO Interface board
- 56k modem
- Network Card

Part#	Description	Qty of Docking Cradles Desired: 1	2	3	4	5
		QTY Items Needed				
096-2566	Auto Calibration Docking System PC : does not include monitor, keyboard, or mouse. Includes Auto-calibration software and IRiS Full software.	1	1	1	1	1
096-2567	Master Docking Cradle	1	1	1	1	1
096-2882	Multi-Cradle Expansion Kit		1	1	1	1
096-2874	Slave Docking Cradle		1	2	3	4

***I.R.I.S. Software** maintains calibration history, exposure, and sensor records. Sensor records allow operators to determine sensor replacement needs prior to field failure.

Calibration Kits

Part Number	Description	List Price
096-2506-10	LEL/CO/H_2S 34 Liter Calibration Kit (.5 LPM Regulator /No Gauge; 2AL cylinder, includes tubing)	$ 300.00
096-2506-11	LEL/CO/H_2S 58 Liter Calibration Kit (.5 LPM Regulator /No Gauge; 8AL cylinder, includes tubing)	$ 345.00
096-2506-12	LEL/CO 34 Liter Calibration Kit (.5 LPM Regulator /No Gauge; 7HP cylinder, includes tubing)	$ 155.00
096-2506-13	LEL/CO 103 Liter Calibration Kit (.5 LPM Regulator /No Gauge; 6D cylinder, includes tubing)	$ 255.00
096-2506-14	LEL/H_2S 34 Liter Calibration Kit (.5 LPM Regulator /No Gauge; 2AL cylinder, includes tubing)	$ 300.00
096-2506-15	LEL/H_2S 58 Liter Calibration Kit (.5 LPM Regulator /No gauge; 8AL cylinder, includes tubing)	$ 345.00
096-2506-16	LEL/CO/H_2S 34 Liter Calibration Kit (.5 LPM Regulator With Gauge; 2AL cylinder, includes tubing)	$ 375.00
096-2506-17	LEL/CO/H_2S 58 Liter Calibration Kit (.5 LPM Regulator with Gauge; 8AL cylinder, includes tubing)	$ 420.00
096-2506-18	LEL/CO 34 Liter Calibration Kit (.5 LPM Regulator with Gauge; 7HP cylinder, includes tubing)	$ 230.00
096-2506-19	LEL/CO 103 Liter Calibration Kit (.5 LPM Regulator with Gauge; 6D cylinder, includes tubing)	$ 330.00
096-2506-20	LEL/H_2S 34 Liter Calibration Kit (.5 LPM Regulator with Gauge; 2AL cylinder, includes tubing)	$ 375.00
096-2506-21	LEL/H_2S 58 Liter Calibration Kit (.5 LPM Regulator with gauge; 8AL cylinder, includes tubing)	$ 420.00
096-2506-22	LEL/CO/H_2S 34 Liter Calibration Kit (.5 LPM Regulator With Demand Flow and Gauge [instrument must be equipped with pump]; 2AL cylinder, includes tubing)	$ 565.00
096-2506-23	LEL/CO/H_2S 58 Liter Calibration Kit (.5 LPM Regulator With Auto Turn-on and Gauge [instrument must be equipped with pump]; 8AL cylinder, includes tubing)	$ 610.00
096-2506-24	LEL/CO 34 Liter Calibration Kit (.5 LPM Regulator With Auto Turn-on and Gauge [instrument must be equipped with pump]; 7HP cylinder, includes tubing)	$ 420.00
096-2506-25	LEL/CO 103 Liter Calibration Kit (.5 LPM Regulator With Auto Turn-on and Gauge [instrument must be equipped with pump]; 6D cylinder, includes tubing)	$ 520.00
096-2506-26	LEL/H_2S 34 Liter Calibration Kit (.5 LPM Regulator With Auto Turn-on and Gauge [instrument must be equipped with pump]; 2AL cylinder, includes tubing)	$ 565.00
096-2506-27	LEL/H_2S 58 Liter Calibration Kit (.5 LPM Regulator With Auto Turn-on and Gauge [instrument must be equipped with pump]; 8AL cylinder, includes tubing)	$ 420.00
096-2506-28	PID & MultiGas Calibration Kit includes 34L/2AL LEL/CO/H_2S and 34L/2AL Isobutylene gas cylinder (. 5 LPM Regulator /No Gauge; cylinder, includes tubing)	$ 440.00
096-2506-29	PID & MultiGas Calibration Kit 58L/8AL LEL/CO/H_2S and 34L/2AL Isobutylene gas cylinder (.5 LPM Regulator /No Gauge; includes tubing)	$ 495.00
096-2506-30	PID & MultiGas Calibration Kit includes 34L/2AL LEL/CO/H_2S and 34L/2AL Isobutylene gas cylinder (.5 LPM Regulator With Auto Turn-on and Gauge [instrument must be equipped with pump]; includes tubing)	$ 705.00
096-2506-31	PID & MultiGas Calibration Kit includes 58L/8AL LEL/CO/H_2S and 34L/2AL Isobutylene gas cylinder (. 5 LPM Regulator With Auto Turn-on and Gauge [instrument must be equipped with pump]; includes tubing)	$ 750.00

Calibration Gas Cylinders

Part Number	Description	List Price
077-0371	25% LEL Pentane/19% O2/balance Nitrogen, 103L, 6D cylinder	$ 150.00
077-0372	25% LEL Pentane/19% O2/50 ppm CO/balance Nitrogen, 103L, 6D cylinder	$ 180.00
077-0277	Ammonia 25 ppm gas cylinder (2AL) 34 L	$ 225.00
077-0273	Carbon Monoxide 50 ppm gas cylinder (7HP) 34 L	$ 115.00
077-0250	Hydrogen [Air bal] Uses rotometer #40000493 (212/227 Liter)	$ 165.00
077-0278	Hydrogen Cyanide 10 ppm gas cylinder (2AL) 34 L	$ 350.00
077-0272	Hydrogen Sulfide 25 ppm gas cylinder (2AL) 34 L	$ 130.00
077-0410	Isobutylene 100 ppm air balance (7HP) 34L	$ 75.00
077-0411	Isobutylene 100 ppm air balance (2AL) 34L	$ 140.00
077-0426	Isobutylene 100 ppm air balance (6D) 103L	$ 185.00
077-0357	Methane (7HP) 34L gas cylinder 32% LEL / 1.62% v/v	$ 50.00
077-0358	Methane gas cylinder (6D) 103 L 32% LEL /1.62% v/v	$ 115.00
077-0367	Methane (7HP) 34L gas cylinder 100% v/v	$ 80.00
077-0351	O_2=19%/LEL=32% Methane /CO=50 ppm/H_2S=25 ppm gas mixture cylinder (2AL) 34L	$ 225.00
077-0352	O_2=19%/LEL=32% Methane /CO=50 ppm/H_2S=25 ppm gas mixture cylinder (8AL) 58L	$ 270.00
077-0353	O_2=19%/LEL=32% Methane /CO=50 ppm/gas mixture cylinder (7HP) 34L	$ 80.00
077-0354	O_2=19%/LEL=32% Methane /CO=50 ppm/gas mixture cylinder (6D) 103L	$ 180.00
077-0355	O_2=19%/LEL=32% Methane /H_2S=25 ppm gas mixture cylinder (2AL) 34L	$ 225.00
077-0356	O_2=19%/LEL=32% Methane /H_2S=25 ppm gas mixture cylinder (8AL) 58L	$ 225.00
077-0383	25% LEL PENTANE, 58L, 8AL CYL.	$ 270.00
077-0387	32% LEL METH,19% O2,50PPM CO, 5E	$ 175.00
077-0346	Nitric Oxide 30 ppm gas cylinder (2AL) 34 L	$ 225.00
077-0465	50% LEL PENTANE, 58L, 8AL CYL.	
077-0280	Nitrogen Dioxide 5 ppm gas cylinder (2AL) 34 L	$ 225.00
077-1239	Phosphine 1 ppm gas cylinder (2AL) 34 L	$ 225.00
077-0276	Sulfur Dioxide 10 ppm gas cylinder (2AL) 34 L	$ 135.00

Regulators

Part Number	Description	List Price
077-0018	2AL/8AL/6D .5 l regulator w/ gauge	$ 160.00
077-0254	2AL/8AL/6D 1LPM Regulator w/gauge	$ 160.00
077-0342	2AL/8AL/6D Demand Flow Regulator	$ 340.00
077-0343	7HP Demand Flow Regulator	$ 340.00
077-0388	Demand Flow Regulator for reactive gases, DFR-2006 w/CGA 330 fitting [fits 65AL]	$ 400.00
077-0389	Demand Flow Regulator, DFR-2003 w/CGA 590 fitting [fits 5E]	$ 400.00
077-1238	7HP.5 l regulator w/gauge	$ 180.00
077-1268	7HP .5 l bullet	$ 75.00
077-1271	2AL/8AL/6D .5 l bullet	$ 90.00
40000493	Rotometer	$ 99.00

Spares & Accessories

Part Number	Description	List Price
068-0024	Coiled FEP tubing,10 ft , 3/8" ID, [use for VOCs (PID), ammonia, phospine	$ 20.00
087-0019	Scout Manual & Programmers Guide (free download at www.scotthealthsafety.com)	$ 10.00
096-2510	Internal Pump [spare/replacement] - Pump requires calibration with the instrument.	$ 160.00
096-2515	Top Scout case with clear LCD lens, rubber buttons, and visual alarm lite pipes	$ 70.00
096-2554	12v DC car adaptor replacement power cord [attaches to single charging cradle]	$ 20.00
096-3062	PID Sensor Cleaning Kit includes abrasive pad, tweezers, screw drivers, and nylon push	$ 28.00
068-0015	FEP Lined Flexible Clear Tubing [recommended for PID (VOCs) ammonia, and phosphine	$ 4.00/ft.
062-0007	Scout Quick Reference Card (English)	$ 3.00
062-0009	Scout CD Assistant - CD-ROM containing Interactive User's Training Module, Manuals, and IRIS Lite Software	$ 10.00
062-0010	Scout VHS Basic Users Training Tape	$ 20.00
074-0366	Bottom Scout case	$ 30.00
076-0104	Torxs Screws	$ 1.00
074-0407	Dummy Sensor Plug (use in all un-used sensor locations)	$ 12.00
077-0452	Abrasive replacement pad (PID Cleaning)	$ 1.00
077-0453	Tweezer replacement (PID cleaning)	$ 12.00
077-0455	Nylon Rod replacement (PID cleaning)	$ 1.00
077-0456	PID Replacement Bulb	$ 250.00
077-0458	PID Replacement Ionization Cell	$ 170.00
077-0459	PID Sensor Cap and Filter Accessories, replacement	$ 45.00
076-0120-55	Screws, Retains sensor cover	$ 1.00
077-0308	Rubber Scout protective boot	$ 45.00
077-0309	Scout Leather Holster	$ 70.00
077-0311	Molded Carrying Case	$ 80.00
077-0314	Pump Bypass for instruments without pump	$ 5.00

continued on next page ▶

▶ *continued from previous page*

077-0323	Barb fitting on internal filter	$ 1.00
077-0376	Scout Leather Holster - Bright Safety Yellow	$ 90.00
077-0382	Belt Loop Replacement	$ 14.00
077-0463	Shoulder Strap	$ 6.00
096-2516	Rubber sensor manifold/filter Accessories	$ 11.00
096-2517	Sensor cover/shutter assembly	$ 50.00
096-2536	Lens assembly includes upper portion of case	$ 60.00
096-2583	Pelican Case	$ 210.00
096-2584	Hand Aspirator with 10 ft. clear flexible (Tygon) tubing	$ 85.00
074-0356	Door, C-Cell Battery Case	$ 10.00
077-0382	Belt Loop, Replacement (Scout)	$ 14.00
077-0384	Replacement cord, EURO plug	$ 20.00
077-0385	Replacement cord, UK plug	$ 20.00
077-0422	10ml Syringe	$ 4.00
077-0454	Screwdriver, #1 Phillips	$ 8.00
077-0463	Replacement shoulder strap, Scout	$ 6.00
093-0366	Sens manifold membrane w/ adhes	$ 6.00
096-2508	Scout main board	$ 188.00
096-2578	Scout programming board for s/n greater than (>) 10,000	$ 10.00
096-2959	Pelican case, multi-gas / PID	$ 210.00
096-3001	Scout pump cleaning kit	$ 20.00
096-3086	Scout programming board for s/n less than (<) 10,000	$ 10.00
076-0120-55	Screw, sensor cover	$ 1.00
096-3062	PID sensor cleaning kit includes abrasive pad, tweezers, 10 finger cots, & nylon push rod	$ 28.00
077-0023	Carrying case for 58 liter of 103 liter cylinders	$ 60.00
077-1300	Finger cots	$ 1.00
096-2775	Scout programmer	$ 650.00

PROTON® ZM & PROTON®

SINGLE GAS DETECTION MONIT

Proton ZM Instrument

Part Number	Description	High	Low	List Price
093-0402	Hydrogen Sulfide (H_2S)	15	10	$ 195.00
093-0402-C	Hydrogen Sulfide (H_2S)	*	*	$ 195.00
093-0403	Carbon Monoxide (CO)	200	35	$ 195.00
093-0403-C	Carbon Monoxide (CO)	*	*	$ 195.00
077-1318	Rubber Boot			$ 25.00

* Custom Alarm points must be specified in writing at time of order. Minimum: 5 ppm H_2S, 20ppm CO. Minimum order 12 pieces.

Proton Instrument

Part Number	Description	Range	List Price
093-0415	Ammonia	0-50	$ 349.00
093-0416	Carbon Monoxide	0-500	$ 195.00
093-0418	Chlorine	0-10	$ 349.00
093-0419	Chlorine Dioxide	0-1	$ 349.00
093-0420	Hydrogen Cyanide	0-100	$ 349.00
093-0421	Hydrogen Sulfide	0-100	$ 195.00
093-0422	Nitric Oxide	0-250	$ 349.00
093-0423	Nitrogen Dioxide	0-20	$ 349.00
093-0424	Oxygen	0-30%	$ 195.00
093-0425	Phosphine	0-5	$ 349.00
093-0426	Sulfur Dioxide	0-20	$ 349.00

Proton® Replacement Sensors and Acccessories

Part Number	Description	List Price
093-0405	Ammonia	$ 250.00
093-0406	Carbon Monoxide	$ 150.00
093-0407	Chlorine	$ 195.00
093-0408	Chlorine Dioxide	$ 250.00
093-0409	Hydrogen Cyanide	$ 250.00
093-0410	Hydrogen Sulfide	$ 150.00
093-0411	Nitric Oxide	$ 195.00
093-0412	Oxygen	$ 100.00
093-0413	Phosphine	$ 250.00
093-0414	Sulfur Dioxide	$ 195.00
077-1318	Rubber Boot	$ 25.00
004-0031	Lithium Battery	$ 20.00

Calibration Kits (include gas cylinder, tubing & regulator)

Part Number	Description	List Price
096-2660	Ammonia - 25 ppm (2AL) 34 Ltr.	$ 500.00
096-2390	Carbon Monoxide - 50ppm (7HP) 34 Ltr.	$ 170.00
096-2656	Chlorine - 5 ppm (2AL) 34 Ltr.	$ 500.00
096-2893	Hydrogen Cyanide - 10 ppm (2AL) 34 Ltr.	$ 500.00
096-2389	Hydrogen Sulfide - 25 ppm (2AL) 34 Ltr.	$ 300.00
096-2894	Nitrogen Dioxide - 5 ppm (2AL) 34 Ltr.	$ 500.00
096-2658	Phosphine - 1ppm (2AL) 34 Ltr.	$ 500.00
096-2662	Sulfur Dioxide - 10 ppm (2AL) 34 Ltr.	$ 325.00

Bump Test Station

Part Number	Description	List Price
093-0404	Proton Test Station (does not include test gas)	$ 495.00
077-0272	Hydrogen Sulfide Gas 25ppm 34 Ltr.	$ 130.00
077-0025	Hydrogen Sulfide Gas 25ppm 58 Ltr.	$ 200.00
077-1342	Carbon Monoxide Gas 50ppm 34 Ltr.	$ 130.00
077-0026	Carbon Monoxide Gas 50ppm 103 Ltr.	$ 200.00

MINI SA

PORTABLE INSTRUMENT

Value Kit only

Part Number	Description	List Price
096-2892	Mini-SA Value Kit - Nitrogen Dioxide (NO_2)	$ 1,000.00
096-2891	Mini-SA Value Kit - Hydrogen Cyanide (HCN)	$ 1,000.00
096-2888	Mini-SA Value Kit - Hydrogen Sulfide (0 to 500 PPM)	$ 685.00
096-2887	Mini-SA Value Kit - Carbon Monoxide (0 to 999 PPM)	$ 560.00
096-2664	Mini-SA Value Kit - Chlorine Dioxide (ClO_2)	$ 1,000.00
096-2663	Mini-SA Value Kit - Sulfur Dioxide (SO_2)	$ 925.00
096-2661	NH_3 Value Kit	$ 1,200.00
096-2659	Mini-SA Value Kit - Phosphine	$ 1,000.00
096-2657	Mini-SA Value Kit - Chlorine	$ 1,000.00
096-2440	Mini-SA Value Kit - Oxygen	$ 560.00

Instruments only

Part Number	Description	List Price
40015195	Mini-SA Nitrogen Dioxide (NO_2)	$ 600.00
40015190	Mini-SA Hydrogen Cyanide (HCN)	$ 600.00
40015184	Mini-SA Hydrogen Sulfide (0 to 500 PPM)	$ 405.00
40015179	Mini-SA Carbon Monoxide (0 to 999 PPM)	$ 405.00
40015156	Mini-SA Phosphine (PH_3) (0.00 to 99.9 PPM)	$ 600.00
40015150	Mini-SA Chlorine Dioxide (ClO_2) (0 to 25.0 PPM)	$ 600.00
40015144	Mini-SA Chlorine (Cl_2) (0 to 99.9 PPM)	$ 600.00
40015138	Mini-SA Sulfur Dioxide (SO_2) (0.0 to 99.9 PPM)	$ 600.00
40015132	Mini-SA Ammonia (NH_3) (0 to 200 PPM)	$ 600.00
40014772	Mini-SA Oxygen (0 to 25%)	$ 405.00

Replacement Sensors

Part Number	Description	List Price
Only Mini-SA's equipped with software version 2 or higher can use sensors other than O2 , CO, or H2S. Factory software upgrade $95		
40015133	Ammonia sensor	$ 350.00
40014806	Carbon Monoxide sensor (0 to 500 ppm)	$ 210.00
40015183	Carbon Monoxide sensor (0 to 999 ppm) requires V 2.0 or higher	$ 210.00
40015145	Chlorine sensor	$ 350.00
40015164	Chlorine sensor kit (includes sensor, cap, filter, and Label)	$ 360.00
40015151	Chlorine Dioxide sensor	$ 350.00
40015165	Chlorine Dioxide sensor kit (includes sensor, cap, filter, and Label)	$ 360.00
40015194	Hydrogen Cyanide sensor	$ 310.00
40014807	Hydrogen Sulfide sensor (0 to 100 ppm)	$ 210.00
40015188	Hydrogen Sulfide sensor (0 to 500 ppm) [replaces p/n 40014775 / 0-200ppm Hydrogen Sulfide Sensor] requires V 2.0 or higher	$ 210.00
40015199	Nitrogen Dioxide sensor	$ 310.00
40014808	Oxygen sensor (0 to 25%)	$ 160.00
40015157	Phospine sensor	$ 350.00
40015166	Phospine sensor kit (includes sensor, cap, filter, and label)	$ 360.00
40015163	Sulfur Dioxide sensor	$ 310.00

Calibration Kits

Part Number	Description	List Price
Kits include cylinder, regulator, tubing, and calibration adaptor.		
096-2660	Ammonia (25 ppm gas cylinder (2AL) 34 L)	$ 500.00
096-2390	Carbon Monoxide (50 ppm gas cylinder) (7HP) 34 L	$ 170.00
096-2656	Chlorine (5 ppm gas cylinder) (2AL) 34 L (also used for ClO_2 calibrations)	$ 500.00
096-2893	Hydrogen Cyanide (10 ppm gas cylinder) (2AL) 34 L	$ 500.00
096-2389	Hydrogen Sulfide (25 ppm gas cylinder) (2AL) 34 L	$ 300.00
096-2894	Nitrogen Dioxide (5 ppm gas cylinder) (2AL) 34 L	$ 500.00
096-2391	Oxygen (18.5%) (2AL) 34 L	$ 290.00
096-2658	Phosphine (1 ppm gas cylinder) (2AL) 34 L	$ 500.00
096-2662	Sulfur Dioxide (10 ppm gas cylinder) (2AL) 34 L	$ 325.00

Calibration Accessories and Equipment

Part Number	Description	List Price
077-1268	.5L regulator for 7HP and EOC cylinders(no gage)	$ 75.00
077-1271	Fixed .5L bullet regulator w/ gauge [Note: This regulator has NO on/off knob. Gas begins to flow immediately upon connection. Fits 2AL, 8AL and 6D	$ 90.00
40014936	Mini-SA Calibration adapter	$ 25.00
077-0273	Carbon Monoxide - 50 PPM [Cylinder type=34L / 7HP] Use with Tygon tubing	$ 115.00
077-0272	Hydrogen Sulfide cylinder (25 ppm) - 34L 2AL	$ 130.00
077-0274	Oxygen cylinder (18.5%) - 34L 7HP	$ 70.00

Miscellaneous Spares & Accessories

Part Number	Description	List Price
006-0050	Dust filter [Chlorine/Chlorine Dioxide only] (Qty 1)	$ 8.00
077-0393	Teflon cap [Chlorine/Chlorine Dioxide only]	$ 4.00
096-0393	Sensor cap, black [Chlorine/Chlorine Dioxide only]	$ 7.00
096-2392	Water repellent Hydrophobic filter (pkg. of 10)	$ 48.00
096-2443	Mini-SA plastic value kit carrying case [only] w/ handle	$ 45.00
096-2620	Hand aspirator accessories	$ 36.00
096-2920	Dust filter [Chlorine/Chlorine Dioxide only] (Pack of 10)	$ 75.00
40014751	Front panel overlay	$ 6.00
40014752	Housing - top (also see part# 40014751)	$ 15.00
40014753	Housing - bottom	$ 15.00
40014754	Sensor cap	$ 8.00
40014760	Main PC board (spare)	$ 210.00
40014781	Polyester case	$ 17.00
40014791	LCD display spare (only)	$ 90.00
40014796	Battery cover assembly	$ 18.00
40014805	Rubber boot	$ 18.00
40014925	Quick release plunger [for strap and clip accessories]	$ 5.00
40014925	Quick release plunger [for clothing clip, neck strap, and harness clip]	$ 2.00
096-2703	Clothing clip (snap clip) - (includes quick release plunger)	$ 5.00
40014779	Harness clip (metal spring-loaded snap hook) - (includes quick release plunger)	$ 8.00
40014780	Neck strap assembly (includes quick release plunger)	$ 15.00

PRIME ALERT®

BIOLOGICAL THREAT VERIFICATION SYSTEM

Complete and Partial Systems

Part Number	Description	List Price
096-3130	Scott Prime Alert Biological Detection Kit - includes instrument, five complete screens, sample collection tools, CD, quick users guide, instrument calibration tubes package in a water resistant pelican case	$ 10,500.00
096-3130-1	Scott Prime Alert Biological Detection Kit - same as above without screen kits	$ 9,450.00

Replenishment Kits

Part Number	Description	List Price
096-3125	Prime Alert Complete Screen (includes one microbe screen, one botulinum toxin screen and one ricin toxic screen - all screen items have a one year shelf life)	$ 210.00
093-0392	Prime Alert Microbe Screen Kit - (includes one microbe screen - this item has a one year shelf life)	$ 105.00

Replacement Kits

Part Number	Description	List Price
077-0486	PA claw sampler	$ 320.00

Training Screen Kits

Part Number	Description	List Price
093-0393	Training screen kit (includes one training microbe kit and one training toxic screen kit) Allows users to perform hands on training at a reduced cost.	$ 115.00

P.O. Box 569
Monroe, NC 28111
Telephone: 800.247.7257
Facsimile: 704.291.8330
www.scotthealthsafety.com
sh-sale@tycoint.com
02.08
Revision B

Nomex is a registered trademark of E.I. DuPont de Nemours and Company. | PBI Gold is a registered trademark of PBI Performance Products, Inc.
Pyrotone is a registered trademark of Elizabeth Webbing Mills Co., Inc. | Kevlar is a registered trademark of E.I. DuPont de Nemours and Company.
InfoTherm is a trademark of FLIR Systems, Inc. | Multi-Wash is a registered trademark of Multi-Wash Medical Ltd. | PortaCount is a registered trademark of TSI, Inc.
Prime Alert is a registered trademark of GenPrime Inc. | Bitrex is a registered trademark of Macfarlan Smith Ltd. | Con-Space is a registered trademark of Con-Space Communications, Ltd.
MSL, Smokesight, and TCR - True Color Reception are a registered trademarks of TriSpec, Inc.

All Rights Reserved.