***CITY OF FORT LAUDERDALE***
***SPECIFICATIONS PACKAGE***

**422-11000**

# Electronic Control Panel and Pre-Qualifications

CITY OF FORT LAUDERDALE

**Bob McKenney**

**954-828-5139**

# Bid 422-11000
# Electronic Control Panel and Pre-Qualifications

| | |
|---|---|
| Bid Number | **422-11000** |
| Bid Title | **Electronic Control Panel and Pre-Qualifications** |
| Bid Start Date | **May 11, 2012 4:10:11 PM EDT** |
| Bid End Date | **Jun 12, 2012 2:00:00 PM EDT** |
| Question & Answer End Date | **Jun 7, 2012 2:00:00 PM EDT** |
| Bid Contact | **Bob McKenney**<br>**Procurement Specialist II**<br>**Procurement**<br>**954-828-5139**<br>**RMcKenney@fortlauderdale.gov** |
| Contract Duration | **See Specifications** |
| Contract Renewal | **See Specifications** |
| Prices Good for | **90 days** |
| Pre-Bid Conference | **May 22, 2012 9:00:00 AM EDT**<br>**Attendance is optional**<br>**Location: City of Fort Lauderdale**<br>**Central Maintenance Shop**<br>**4250 NW 10th Avenue**<br>**Fort Lauderdale, FL 33309** |
| Bid Comments | **The City of Fort Lauderdale is actively seeking bids from qualified bidders, hereinafter referred to as the Contractor, to pre-qualify contractors that can construct and deliver one functional Supervisory Control and Data Acquisition (SCADA) Interface Panel for the Public Works Department in full accordance with the specifications, terms, and conditions contained in this Invitation to Bid (ITB).**<br>**For information concerning procedures for responding to this ITB, contact Procurement Specialist II Bob McKenney at 954.828.5139 or rmckenney@fortlauderdale.gov. Any questions that bidders wish to have addressed and which might require an addendum must be submitted through the Question and Answer format through the BidSync website. If required, written addendum will be issued by the City.**<br>**As a clarification the Contractor is the company or person submitting the bid or RFP per the examples listed. Example 1: if John Doe submits a bid under the name of XYZ, Inc. and XYZ's Federal Tax Number than XYZ, Inc. is the contractor. Example 2: if John Doe submits a bid under his own name and personal Social Security number, than John Doe is the contractor. Contractors must meet all requirements at the time of bid submittal.**<br>**The questions and answers section of this bid or RFP in BidSync will become part of any contract that is created from this bid or RFP.**<br>**The City of Fort Lauderdale uses BidSync (www.BidSync.com) to distribute and receive bids and proposals. There is no charge to vendors/contractors to register and participate in this solicitation process, nor will any fees be charged to the awarded vendor. Refer to www.BidSync.com for further information.**<br>**All bids should be submitted electronically through www.BidSync.com.**<br>**Added on May 22, 2012:**<br>**Addendum #1**<br>**The end date has changed to June 12, 2012 at 2:00 PM.** |

---

**Changes made on May 22, 2012 10:16:59 AM EDT**

| | | | |
|---|---|---|---|
| Previous End Date | **Jun 5, 2012 2:00:00 PM EDT** | New End Date | **Jun 12, 2012 2:00:00 PM EDT** |

Previous Q & A End Date **Jun 1, 2012 2:00:00 PM EDT** New Q & A End Date **Jun 7, 2012 2:00:00 PM EDT**

---

**Item Response Form**

| | |
|---|---|
| Item | **422-11000--01-01 - SCADA Unit** |
| Quantity | **1 each** |
| Unit Price | |
| Delivery Location | **City of Fort Lauderdale**<br>Public Works / Central Maintenance Shop<br>4250 NW 10th Avenue<br>Fort Lauderdale FL 33309<br>**Qty** 1 |

**Description**

Construct and deliver one (1) fully functional Supervisory Control and Data Acquisition (SCADA) Interface Panel utilizing the (SCADA) Interface Panel Drawings and schematics included in the Bid packet.
See Part II - Technical Specifications and the attached drawings.

**ITB # 422-11000**
**TITLE: Electronic Control Panel, Pre-qualifications**

## PART I - INFORMATION SPECIAL CONDITIONS

01. PURPOSE

The City of Fort Lauderdale, Florida (City) is seeking bids from qualified bidders, hereinafter referred to as the Contractor, to pre-qualify contractors that can construct and deliver one functional Supervisory Control and Data Acquisition (SCADA) Interface Panel for the City's Public Works Department, in accordance with the terms, conditions, and specifications contained in this Invitation To Bid (ITB). The intent of the City is to award this bid to multiple vendors. Each contractor chosen by the City would build one SCADA unit as per the City's specifications. These units will be tested by the City. Those contractor's units that operate correctly, are built to the City's specifications and are acceptable to the City would become the pre-qualified contractor's list. Each time a unit(s) is needed in the future, a quotation or bid would be created, submitted to those pre-qualified contractors and the low bidder would be awarded that/those units.

02. INFORMATION OR CLARIFICATION

For information concerning procedures for responding to this solicitation, contact Procurement Specialist II Bob McKenney at 954.828.5139 or email at rmckenney@fortlauderdale.gov. Such contact shall be for clarification purposes only.

For information concerning technical specifications please utilize the question / answer feature provided by BidSync at www.bidsync.com. Questions of a material nature must be received prior to the cut-off date specified in the solicitation. Material changes, if any, to the scope of services or bidding procedures will only be transmitted by written addendum. (See addendum section of BidSync Site). Contractors please note: No part of your bid can be submitted via FAX. No variation in price or conditions shall be permitted based upon a claim of ignorance. Submission of a bid will be considered evidence that the Contractor has familiarized themselves with the nature and extent of the work, and the equipment, materials, and labor required. The entire bid response must be submitted in accordance with all specifications contained in this solicitation.

It is the sole responsibility of the Contractor to ensure that their bid is submitted electronically through BidSync at www.bidsync.com or reaches the City of Fort Lauderdale City Hall, Procurement Services Division, 6th floor, Room 619, 100 N. Andrews Avenue, Fort Lauderdale, FL 33301 in a sealed envelope marked on the outside with the ITB solicitation number and Contractor's name, no later than the time and date specified in this solicitation.

03. TRANSACTION FEES

The City of Fort Lauderdale uses BidSync (www.bidsync.com) to distribute and receive bids and proposals. There is no charge to vendors/contractors to register and participate in the solicitation process, nor will any fees be charged to the awarded contractor.

04. PRE-BID CONFERENCE AND/OR SITE VISIT

There will be a pre-bid conference scheduled for Tuesday May 22, 2012 at 9:00 a.m., Central Maintenance Shop 4250 NW 10th Avenue Fort Lauderdale, FL 33309. It is strongly suggested that all Contractor's attend the pre-proposal conference.

While attendance is not mandatory, it is the sole responsibility of the Contractor to become familiar with the scope of the City's requirements and systems prior to submitting a proposal. No variation in price or conditions shall be permitted based upon a claim of ignorance. It is strongly suggested that all Contractor's attend the pre-bid meeting and/or site visit.

05. ELIGIBILITY
To be eligible for award of a contract in response to this solicitation, the Contractor must demonstrate that they have successfully completed services, as specified in the Technical Specifications / Scope of Services section of this solicitation are normally and routinely engaged in performing such services, and are properly and legally licensed to perform such work. In addition, the Contractor must have no conflict of interest with regard to any other work performed by the Contractor for the City of Fort Lauderdale.

06. PRICING/DELIVERY
Delivery is required within 45 calendar days after receipt of purchase order. Failure to meet this delivery date may be deemed as non-responsive.

07. BID DOCUMENTS
The Contractor shall examine this bid carefully. Ignorance of the requirements will not relieve the Contractor from liability and obligation under the Contract.

08. AWARD
The intent of the City is to award this bid to multiple vendors.
The City reserves the right to waive minor variations in the specifications and in the bidding process. The City further reserves the right to accept or reject any and/or all bids and to award or not award a contract based on this bid solicitation.

09. GENERAL CONDITIONS
General Conditions Form G-107 Rev. 12/11 (GC) are included and made a part of this ITB.

10. NEWS RELEASES/PUBLICITY
News releases, publicity releases, or advertisements relating to this contract or the tasks or projects associated with the project shall not be made without prior City approval.

11. CONTRACTORS' COSTS
The City shall not be liable for any costs incurred by proposers in responding to this solicitation.

12. RULES AND SUBMITTALS OF BIDS
The signer of the bid must declare that the only person(s), company or parties interested in the proposal as principals are named therein; that the bid is made without collusion with any other person(s), company or parties submitting a bid; that it is in all respects fair and in good faith, without collusion or fraud; and that the signer of the bid has full authority to bind the principal bidder.

13. MANUFACTURER/BRAND/MODEL SPECIFIC REQUEST
The components of the SCADA unit are a manufacturer/brand/model specification. No substitutions will be allowed.

14. PRE-APPROVAL

The pre-approved list will start on the date of award by the City. The City reserves the right to evaluate additional contractors at any time and add or delete contractors to this list at the discretion of the City

15. INVOICES/PAYMENT
Payment terms will be considered to be net 45 days after the date of satisfactory delivery at the place of acceptance and receipt of correct invoice at the office specified, whichever occurs last. Bidder may offer cash discounts for prompt payment but they will not be considered in determination of award.

16. RELATED EXPENSES/TRAVEL EXPENSES
All costs including travel are to be included in your proposal. The City will not accept any additional costs.

17. NO EXCLUSIVE CONTRACT/ADDITIONAL SERVICES
While this contract is for services provided to the department referenced in this Invitation For Bid, the City may require similar work for other City departments. Contractor agrees to take on such work unless such work would not be considered reasonable or become an undue burden to the Contractor.

Contractor agrees and understands that the contract shall not be construed as an exclusive arrangement and further agrees that the City may, at any time, secure similar or identical services from another vendor at the City's sole option.

The City may require additional items or services of a similar nature, but not specifically listed in the contract. The Contractor agrees to provide such items or services, and shall provide the City prices on such additional items or services based upon a formula or method, which is the same or similar to that used in establishing the prices in his proposal. If the price(s) offered are not acceptable to the City, and the situation cannot be resolved to the satisfaction of the City, the City reserves the right to procure those items or services from other vendors, or to cancel the contract upon giving the Contractor thirty (30) days written notice.

18. INSURANCE
The Contractor shall furnish proof of insurance requirements as indicated below. The coverage is to remain in force at all times during the contract period. The following minimum insurance coverage is required. The City is to be added as an "additional insured" with relation to General Liability Insurance. This MUST be written in the description section of the insurance certificate, even if you have a check-off box on your insurance certificate. Any costs for adding the City as "additional insured" will be at the contractor's expense.

The City of Fort Lauderdale shall be given notice 10 days prior to cancellation or modification of any stipulated insurance. The insurance provided shall be endorsed or amended to comply with this notice requirement. In the event that the insurer is unable to accommodate, it shall be the responsibility of the Contractor to provide the proper notice. Such notification will be in writing by registered mail, return receipt requested and addressed to the Procurement Services Division.

The Contractor's insurance must be provided by an A.M. Best's "A-" rated or better insurance company authorized to issue insurance policies in the State of Florida, subject to approval by the City's Risk Manager. Any exclusions or provisions in the insurance maintained by the contractor that precludes coverage for work contemplated in this ITB shall be deemed

unacceptable, and shall be considered breach of contract.

**Workers' Compensation and Employers' Liability Insurance**

Limits: Workers' Compensation – Per Florida Statute 440
Employers' Liability - $500,000

Any firm performing work on behalf of the City of Fort Lauderdale must provide Workers' Compensation insurance. Exceptions and exemptions can only be made if they are in accordance with Florida Statute. For additional information contact the Department of Financial Services, Workers' Compensation Division at (850) 413-1601 or on the web at www.fldfs.com.

**Commercial General Liability Insurance**

Covering premises-operations, products-completed operations, independent contractors and contractual liability.

Limits: Combined single limit bodily injury/property damage $1,000,000.

This coverage must include, but not limited to:

a. Coverage for the liability assumed by the contractor under the indemnity provision of the contract.
b. Coverage for Premises/Operations
c. Products/Completed Operations
d. Broad Form Contractual Liability
e. Independent Contractors

**Automobile Liability Insurance**

Covering all owned, hired and non-owned automobile equipment.

| | |
|---|---|
| Limits: Bodily injury | $250,000 each person |
| | $500,000 each occurrence |
| Property damage | $100,000 each occurrence |

A copy of **ANY** current Certificate of Insurance should be included with your proposal.

In the event that you are the successful bidder, you will be required to provide a certificate naming the City as an "additional insured" for General Liability.

Certificate holder should be addressed as follows:
City of Fort Lauderdale
Procurement Services Division
100 N. Andrews Avenue, Room 619
Fort Lauderdale, FL 33301

19. UNCONTROLLABLE CIRCUMSTANCES ("Force Majeure")
The City and Contractor will be excused from the performance of their respective obligations under this agreement when and to the extent that their performance is delayed or prevented by

any circumstances beyond their control including, fire, flood, explosion, strikes or other labor disputes, act of God or public emergency, war, riot, civil commotion, malicious damage, act or omission of any governmental authority, delay or failure or shortage of any type of transportation, equipment, or service from a public utility needed for their performance, provided that:

A. The non performing party gives the other party prompt written notice describing the particulars of the Force Majeure including, but not limited to, the nature of the occurrence and its expected duration, and continues to furnish timely reports with respect thereto during the period of the Force Majeure;

B. The excuse of performance is of no greater scope and of no longer duration than is required by the Force Majeure;

C. No obligations of either party that arose before the Force Majeure causing the excuse of performance are excused as a result of the Force Majeure; and

D. The non performing party uses its best efforts to remedy its inability to perform.

Notwithstanding the above, performance shall not be excused under this Section for a period in excess of two (2) months, provided that in extenuating circumstances, the City may excuse performance for a longer term. Economic hardship of the Contractor will not constitute Force Majeure. The term of the agreement shall be extended by a period equal to that during which either party's performance is suspended under this Section.

20. PUBLIC ENTITY CRIMES

NOTE: Contractor, by submitting a proposal attests she/he/it has not been placed on the convicted vendor list.

A person or affiliate who has been placed on the convicted vendor list following a conviction for a public entity crime may not submit a bid on a contract to provide any goods or services to a public entity, may not submit a bid on a contract with a public entity for the construction or repair of a public building or public work, may not submit bids on leases of real property to a public entity, may not be awarded or perform work as a contractor, supplier, subcontractor, or consultant under a contract with any public entity, and may not transact business with any public entity in excess of the threshold amount provided in Section 287.017, Florida Statutes, for Category Two for a period of 36 months from the date of being placed on the convicted vendor list.

21. CANADIAN COMPANIES

The City may enforce in the United States of America or in Canada or in both countries a judgment entered against the Contractor. The Contractor waives any and all defenses to the City's enforcement in Canada, of a judgment entered by a court in the United States of America. All monetary amounts set forth in this Contract are in United States dollars.

22. LOBBYING ACTIVITIES

ALL CONTRACTORS PLEASE NOTE: Any contractor submitting a response to this solicitation must comply, if applicable, with City of Fort Lauderdale Ordinance No. C-00-27 & Resolution No. 07-101, Lobbying Activities. Copies of Ordinance No. C-00-27 and Resolution No. 07-101 may be obtained from the City Clerk's Office on the 7th Floor of City Hall, 100 N. Andrews

Avenue, Fort Lauderdale, Florida. The ordinance may also be viewed on the City's website at http://www.fortlauderdale.gov/clerk/LobbyistDocs/lobbyistord1009.pdf .

23. BID TABULATIONS/INTENT TO AWARD
Notice of Intent to Award Contract/Bid, resulting from the City's Formal solicitation process, requiring City Commission action, may be found at: http://www.fortlauderdale.gov/purchasing/notices_of_intent.htm . Tabulations of receipt of those parties responding to a formal solicitation may be found at: http://www.fortlauderdale.gov/purchasing/bidresults.htm , or any interested party may call the Procurement Services Division at 954-828-5933.

## PART II - TECHNICAL SPECIFICATIONS/SCOPE OF SERVICES

Scope of Work

Construct and deliver one (1) fully functional Supervisory Control and Data Acquisition (SCADA) Interface Panel utilizing the (SCADA) Interface Panel Drawings and schematics included in the Bid packet with the following guidelines:

Only Bidders that offer local support (Dade, Broward, or Palm Beach County) for their products will be considered for this Bid/Pre-qualified list.

1) The successful Contractors will have forty-five calendar days (45) to construct and deliver to the City one SCADA Interface Panel for testing and must adhere to the selected components, parts, materials and manufacturers listed in Drawing # 3 BILL OF MATERIALS AND COMMUNICATIONS of the attached documents no equals or substitutes will be accepted.
2) The successful Contractors must construct the SCADA Interface Panel layout, component placement, wiring, wire terminations, wire coding, wire coloring and functionality as they are drawn in the SCADA Interface Panel Drawings and Schematics provided.
3) The successful Contractor, upon completion of construction, will notify the designated City's Distribution and Collection Systems representative to schedule the delivery of the finished product to the City of Fort Lauderdale at 4250 N.W. 10$^{TH}$ Avenue for testing and evaluation. Testing will be comprised of functionality, workmanship and the ability of the contractor to build the product from the City Standard Drawings and Schematics.
4) The City's Distribution and Collection Systems representative will be responsible for loading the program into the Program Logic Controller (PLC) for testing. Any and all programs utilized by the City are considered proprietary and the sole property of the City. No program will be provided to any Contractor at any time. The City's Distribution and Collection Systems representative will have the sole and complete authority over the evaluation and testing process. During testing and evaluation any punch list items must be resolved before product will be accepted. If a unit fails the City's testing, the Contractor will have seven calendar days to make any repairs necessary to make the unit functional. The unit will then be re-tested by the City. If the unit passes inspection after the second inspection, it will be accepted and paid for. However, if the unit fails the second time, the unit will be rejected and returned to the Contractor. The City will not pay for or be liable for any costs associated with the failed unit. It will be the contractor's responsibility to make any necessary changes at their facility and schedule product to be retested at no additional cost to the City. No product may leave the testing facility without first removing the City's Distribution and Collection Systems program from the PLC.
5) Once the successful contractor(s) has provided a fully functional SCADA Interface Panel and it has been evaluated and approved by the City, the City will accept ownership of the SCADA Interface Panel and the invoice will be processed for payment. The SCADA Interface Panel must be completed and tested within the forty-five (45) calendar days from issuance of a purchase order. Any product not completed and tested within this timeframe will not be accepted.

6) The City's intent is to evaluate multiple SCADA units built by various contractors. At the end of the evaluation period the City will add those contractors that have passed the City's evaluation to a pre-qualified contractor's list. Those vendors that are placed on the pre-qualified contractor's list will be solicited by quote or bid when future needs arise. At this time, the City envisions purchasing up to 150 units over an unspecified period of time.

# CITY OF FORT LAUDERDALE
## SANITARY SEWER PUMP STATION – CONTROL PANEL DRAWING INDEX

| DRAWING NO. | DESCRIPTION |
|---|---|
| 1 | CONTROL PANEL LAYOUT |
| 2 | BILL OF MATERIALS & COMMUNICATIONS WIRING |
| 3 | POWER DISTRIBUTION, PLC SLOT 0 & PLC SLOT 1 WIRING DIAGRAM |
| 4 | PLC SLOT 2, PLC SLOT 3 & PLC SLOT 4 WIRING DIAGRAM |
| 5 | TERMINAL BLOCK TB1, TB2 & TB3 WIRING DETAILS |
| | |

CONSTRUCTION OR BID

PLOT DATE: May 8, 2012

DRAWN BY: DYA
DATE: JAN 2012
DESIGNED BY: DYA
SCALE: NTS
CHECKED BY:
FIELD BOOK:

CITY OF FORT LAUDERDALE
PUBLIC WORKS DEPARTMENT
DISTRIBUTION & COLLECTION
4250 NW 10 Ave. Fort Lauderdale, Florida 33309

REVISIONS

| NO. | DATE | BY | CHKD | DESCRIPTION |
|---|---|---|---|---|
| | | | | |

PROJECT #
SANITARY SEWER PUMP STATION
CONTROL PANEL
DRAWING INDEX

SHEET NO. 0 OF 5
TOTAL: 5
CAD FILE: SUITCASE_DIAG_0
DRAWING FILE NO.

PLOT DATE: May 8, 2012

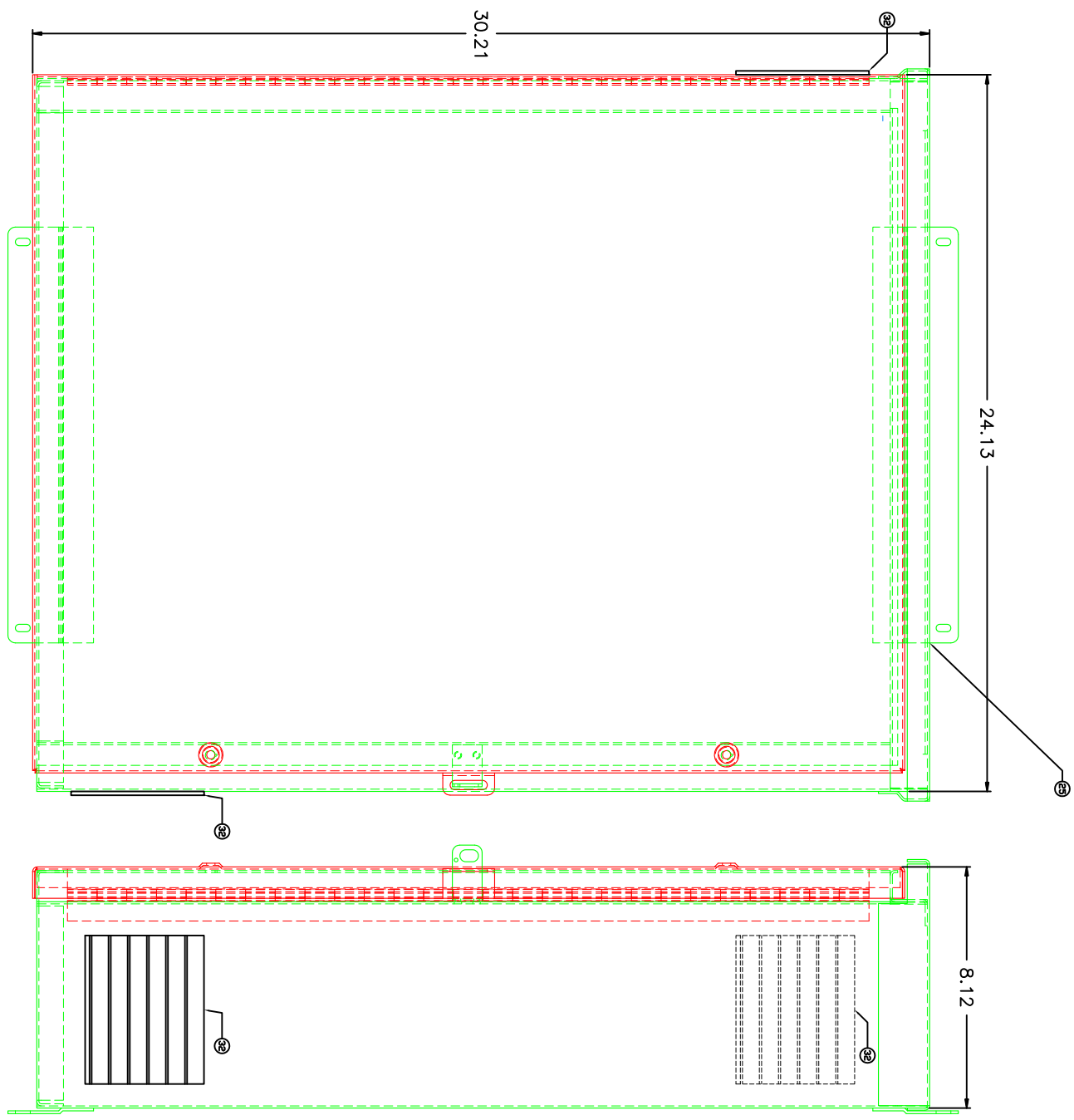


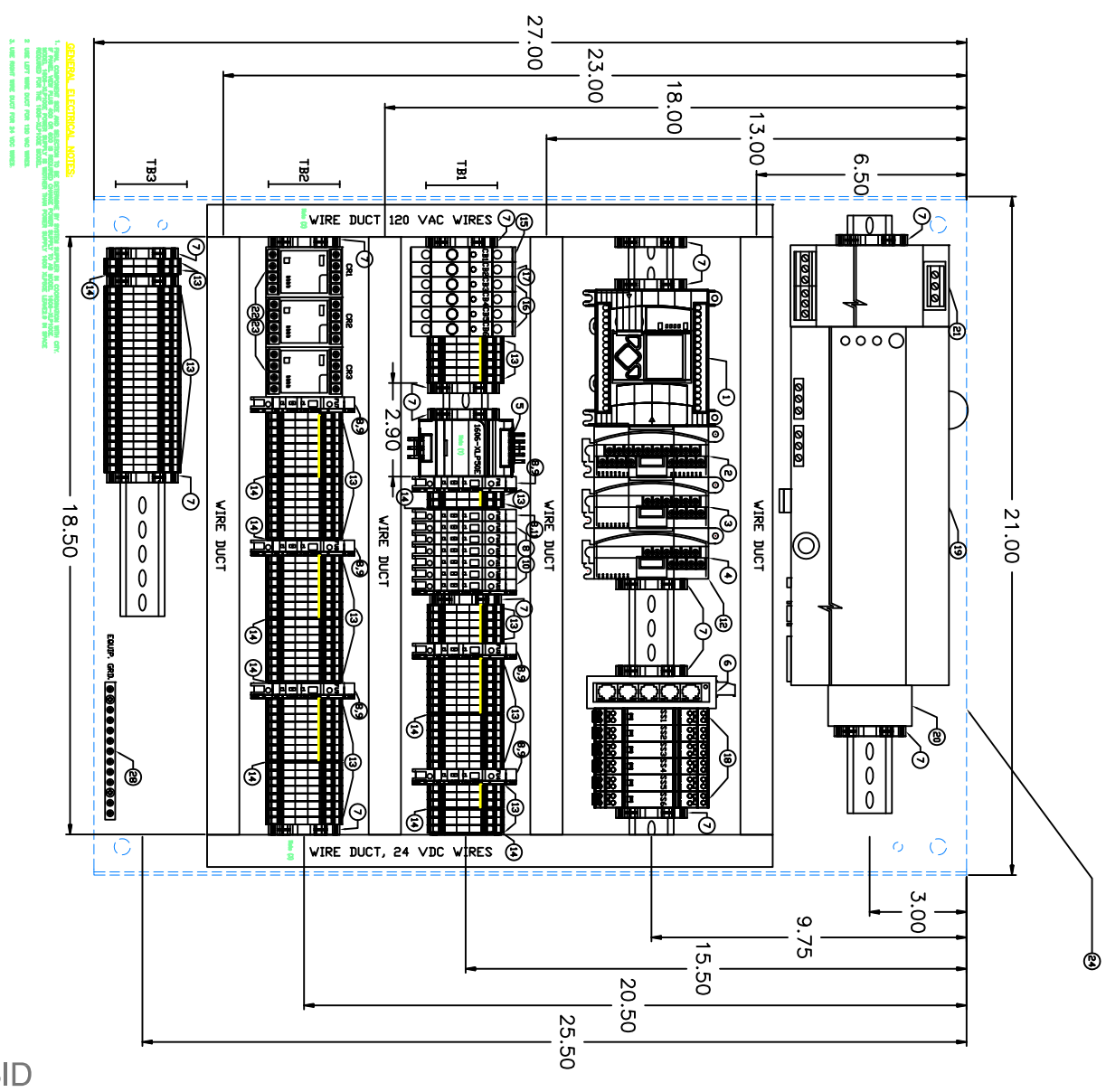


CONSTRUCTION OR BID

| | |
|---|---|
| SHEET NO. | 1 OF 5 |
| TOTAL: | 5 |
| CAD FILE: | SUITCASE_DIAG_1 |
| DRAWING FILE NO. | |

PROJECT #
SANITARY SEWER PUMP STATION
CONTROL PANEL
CONTROL PANEL LAYOUT

REVISIONS

| NO. | DATE | BY | CHK'D | DESCRIPTION |
|---|---|---|---|---|
| | | | | |

CITY OF FORT LAUDERDALE
PUBLIC WORKS DEPARTMENT
DISTRIBUTION & COLLECTION
4250 NW 10 Ave, Fort Lauderdale, Florida 33309

| | |
|---|---|
| DRAWN BY: DYA | DATE: JAN 2012 |
| DESIGNED BY: DYA | SCALE: NTS |
| CHECKED BY: | |
| FIELD BOOK: | |

## BILL OF MATERIAL

| ITEM NO. | QTY | DESCRIPTION | MANUFACTURER & PART NUMBER |
|---|---|---|---|
| 1 | 1 | MicroLogix 1100 Programable Controller | Allen-Bradley, 1763-L16BWA |
| 2 | 1 | 16-Point Sink/Source 24V DC Input Module | Allen-Bradley, 1762-IQ16 |
| 3 | 1 | 8-Point Sink/Source 24V DC Input and 6-Point AC/DC Relay Output Module. | Allen-Bradley, 1762-IQ8OW6 |
| 4 | 2 | 4-Channel Voltage/Current Analog Input Module | Allen-Bradley, 1762-IF4 |
| 5 | 1 | Compact Power Supply, 24-28V DC, 50 W, 120/240V AC / 85-375V DC Input Voltage | Allen-Bradley, 1606-XLP50E |
| 6 | 1 | Spider 5TX Industrial Rail Ethernet Switch | Hirschmann , 943 824-002 |
| 7 | 16 | End Anchor, used w/ Standard 35mm Din Rail, Gray | Allen-Bradley, 1492-EAJ35 |
| 8 | 13 | Finger-Safe Single Circuit Fuse Block, No Blown Fuse Indicator, #30 - #12 AWG, Black. | Allen-Bradley, 1492-H6 |
| 9 | 6 | 1/2 A, Fast-Acting Glass Body Fuse, 1/4in x 1 1/4 in | Littelfuse, 0312.500 |
| 10 | 6 | 1/32 A, Fast-Acting Glass Body Fuse, 1/4in x 1 1/4 in | Grainger, ICM28 |
| 11 | 1 | 2 A, Slo-Blo Glass Body Fuse, 1/4in x 1 1/4 in | Littelfuse, 0313.002 |
| 12 | 7 | End Barrier Single Circuit Fuse or Isolation Blocks, Black | Allen-Bradley, 1492-N37 |
| 13 | 107 | IEC 1-Circuit Feed-Through Block, 4mm? max. wire, Gray | Allen-Bradley, 1492-J4 |
| 14 | 10 | End Barrier, Gray | Allen-Bradley, 1492-EBJ3 |
| 15 | 1 | Miniature Circuit Breaker, 10.0 Amp Rating | Allen-Bradley, 1492-GH100 |
| 16 | 4 | Miniature Circuit Breaker, 5.0 Amp Rating | Allen-Bradley, 1492-GH050 |
| 17 | 1 | Miniature Circuit Breaker, 2.0 Amp Rating | Allen-Bradley, 1492-GH020 |
| 18 | 6 | Surge and Filter Protection, Din Rail Mount, Dataline UL 497B, 24V DC. | Allen-Bradley, 4983-DD24 |
| 19 | 1 | DIN Rail AC UPS, Uninterruptible Power System SDU Series | Sola, SDU500 |
| 20 | 1 | Dry Contact Relay Kit | Sola, RelayCard-SDU |
| 21 | 1 | DIN Rail TVSS Module | Sola, STV25K10S |
| 22 | 3 | Octal Power Relay, 8 Pin / DPDT, 16 Amp Rating, 120 VAC | Magnecraft, 750XBXM4L-120A |
| 23 | 3 | DIN Rail Mount Relay Socket Screw Type, 8 pin | IDEC, SR2P-06 |
| 24 | 1 | Panel for Type 3R Enclosure, Painted Steel, 27 x 21 in | Hoffman, A30P24 |
| 25 | 1 | Hinge-Cover, Medium, Type 3R Enclosure, 30 x 24 x 8 in | Hoffman, A30R248HCR |
| 26 | 7 | Center Jumpers | Allen-Bradley, 1492-CJJ6-10 |
| 27 | 1 | Snap-In Marker Card, White | Allen-Bradley, 1492-M6X12 |
| 28 | 1 | Ground Bar Kit, 10 Position #14-4AWG | ElectriCenter, ECGB10 |
| 29 | 3 | DIN Rail 35mm aluminum 1m | IDEC, BNDN-1000 |
| 30 | 2 | Panduct Type MC Metric Narrow Slot Wiring Duct, Gray 0.97 x 2.85 in, 2m | Panduit, MC25X75IG2 |
| 31 | 2 | Wiring Duct cover, 2m | Panduit, C25IG2 |
| 32 | 2 | Louvered Vent, Stainless Steel, 5" x 4 5/8 in | West Marine, 226993 |
| 33 | | Wire Labels, *=Letter or Number | Thomas & Betts, SMS196-9-* |
| 34 | | Pin Terminals - Blue | Thomas & Betts, 14RB-47PT |
| 35 | | Pin Terminals - Red | Thomas & Betts, 14RA-47PT |

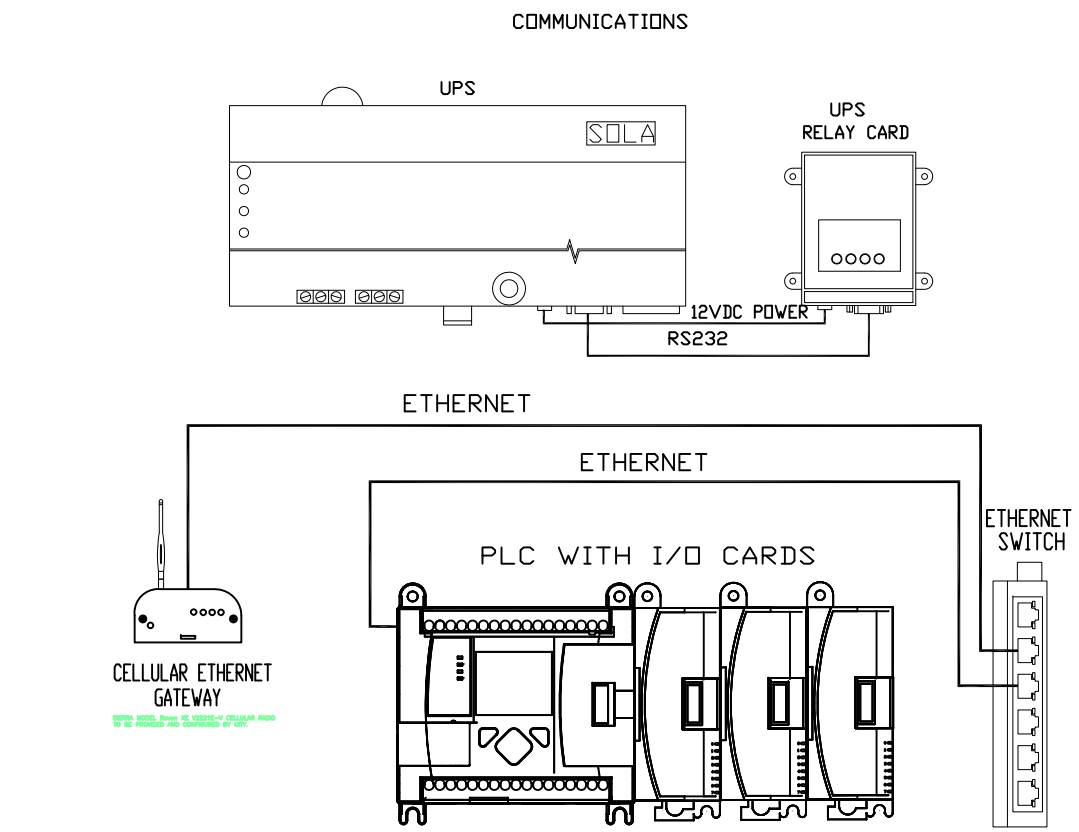


## ELECTRIC & PROCESS SYMBOLS

CONSTRUCTION OR BID

PROJECT #
SANITARY SEWER PUMP STATION
CONTROL PANEL
BILL OF MATERIALS & COMMUNICATIONS

CITY OF FORT LAUDERDALE
PUBLIC WORKS DEPARTMENT
DISTRIBUTION & COLLECTION
4250 NW 10 Ave. Fort Lauderdale, Florida 33309

| DRAWN BY: | DATE: |
|---|---|
| DYA | JAN 2012 |
| DESIGNED BY: | SCALE: |
| DYA | NTS |
| CHECKED BY: | |
| FIELD BOOK: | |

REVISIONS

| NO. | DATE | BY | CHKD | DESCRIPTION |
|---|---|---|---|---|
| | | | | |

| SHEET NO. | OF |
|---|---|
| 2 | 5 |

TOTAL: 5

CAD FILE: SUITCASE_DIAG_2

DRAWING FILE NO.

PLOT DATE: May 8, 2012

PLOT DATE: May 8, 2012

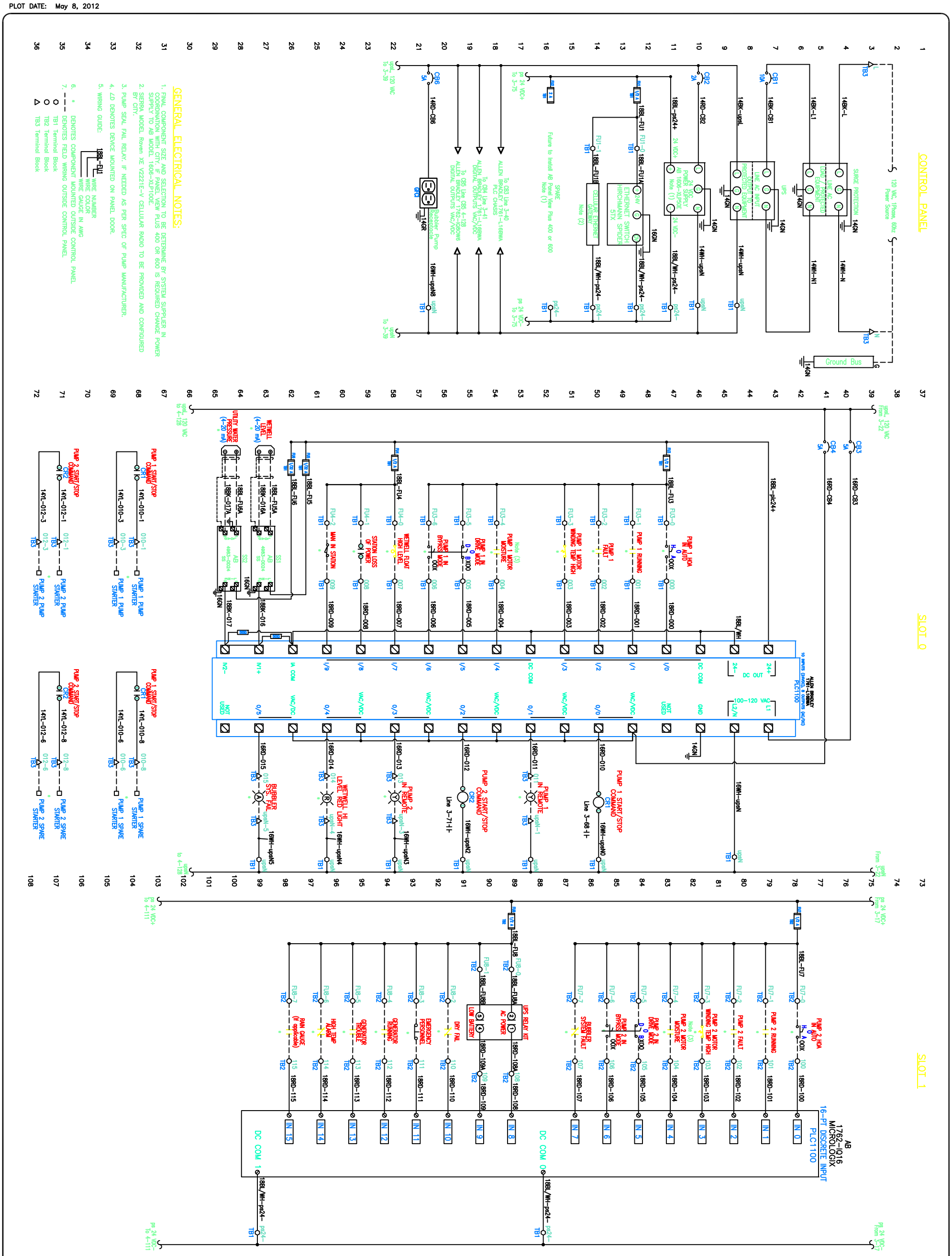


CONSTRUCTION OR BID

| SHEET NO. | OF |
|---|---|
| 3 | 5 |

TOTAL: 5
CAD FILE: SUITCASE_DIAG_3
DRAWING FILE NO.

PROJECT #
PUMP STATION REHAB
CONTROL PANEL
POWER DISTRIB., PLC SLOT 0 & 1 WIRING

REVISIONS

| NO. | DATE | BY | CHK'D | DESCRIPTION |
|---|---|---|---|---|
| | | | | |

CITY OF FORT LAUDERDALE
PUBLIC WORKS DEPARTMENT
DISTRIBUTION & COLLECTION
4250 NW 10 Ave, Fort Lauderdale, Florida 33309

| | |
|---|---|
| DRAWN BY: DYA | DATE: JAN 2012 |
| DESIGNED BY: DYA | SCALE: NTS |
| CHECKED BY: | |
| FIELD BOOK: | |

PLOT DATE: May 8, 2012

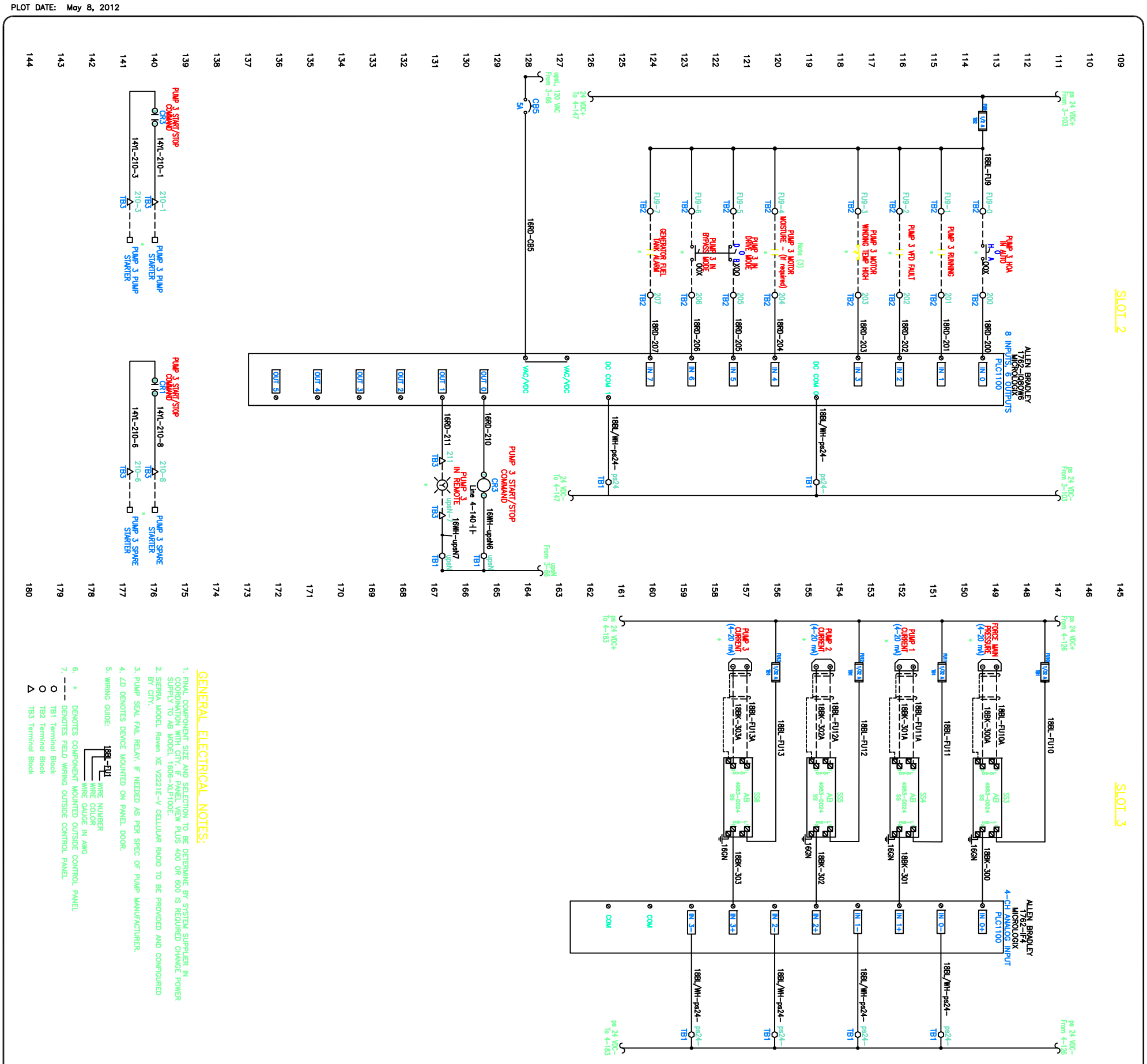


## GENERAL ELECTRICAL NOTES:

1. FINAL COMPONENT SIZE AND SELECTION TO BE DETERMINE BY SYSTEM SUPPLIER IN COORDINATION WITH CITY. IF PANEL VIEW PLUS 400 OR 600 IS REQUIRED CHANGE POWER SUPPLY TO AB MODEL 1606-XLP100E.
2. SIERRA MODEL Raven XE V2221E-V CELLULAR RADIO TO BE PROVIDED AND CONFIGURED BY CITY.
3. PUMP SEAL FAIL RELAY, IF NEEDED AS PER SPEC OF PUMP MANUFACTURER.
4. LD DENOTES DEVICE MOUNTED ON PANEL DOOR.
5. WIRING GUIDE: 18BL-FU1 — WIRE NUMBER / WIRE COLOR / WIRE GAUGE IN AWG
6. * DENOTES COMPONENT MOUNTED OUTSIDE CONTROL PANEL
7. - - - DENOTES FIELD WIRING OUTSIDE CONTROL PANEL

○ TB1 Terminal Block
○ TB2 Terminal Block
△ TB3 Terminal Block

CONSTRUCTION OR BID

| | |
|---|---|
| SHEET NO. | 4 OF 5 |
| TOTAL: | 5 |
| CAD FILE: | SUITCASE_DIAG_4 |
| DRAWING FILE NO. | |

PROJECT #
SANITARY SEWER PUMP STATION
CONTROL PANEL
PLC SLOT 2 & SLOT 3 WIRING

REVISIONS

| NO. | DATE | BY | CHK'D | DESCRIPTION |
|---|---|---|---|---|
| | | | | |

CITY OF FORT LAUDERDALE
PUBLIC WORKS DEPARTMENT
DISTRIBUTION & COLLECTION
4250 NW 10 Ave, Fort Lauderdale, Florida 33309

| | |
|---|---|
| DRAWN BY: DYA | DATE: JAN 2012 |
| DESIGNED BY: DYA | SCALE: NTS |
| CHECKED BY: | |
| FIELD BOOK: | |

PLOT DATE: May 9, 2012

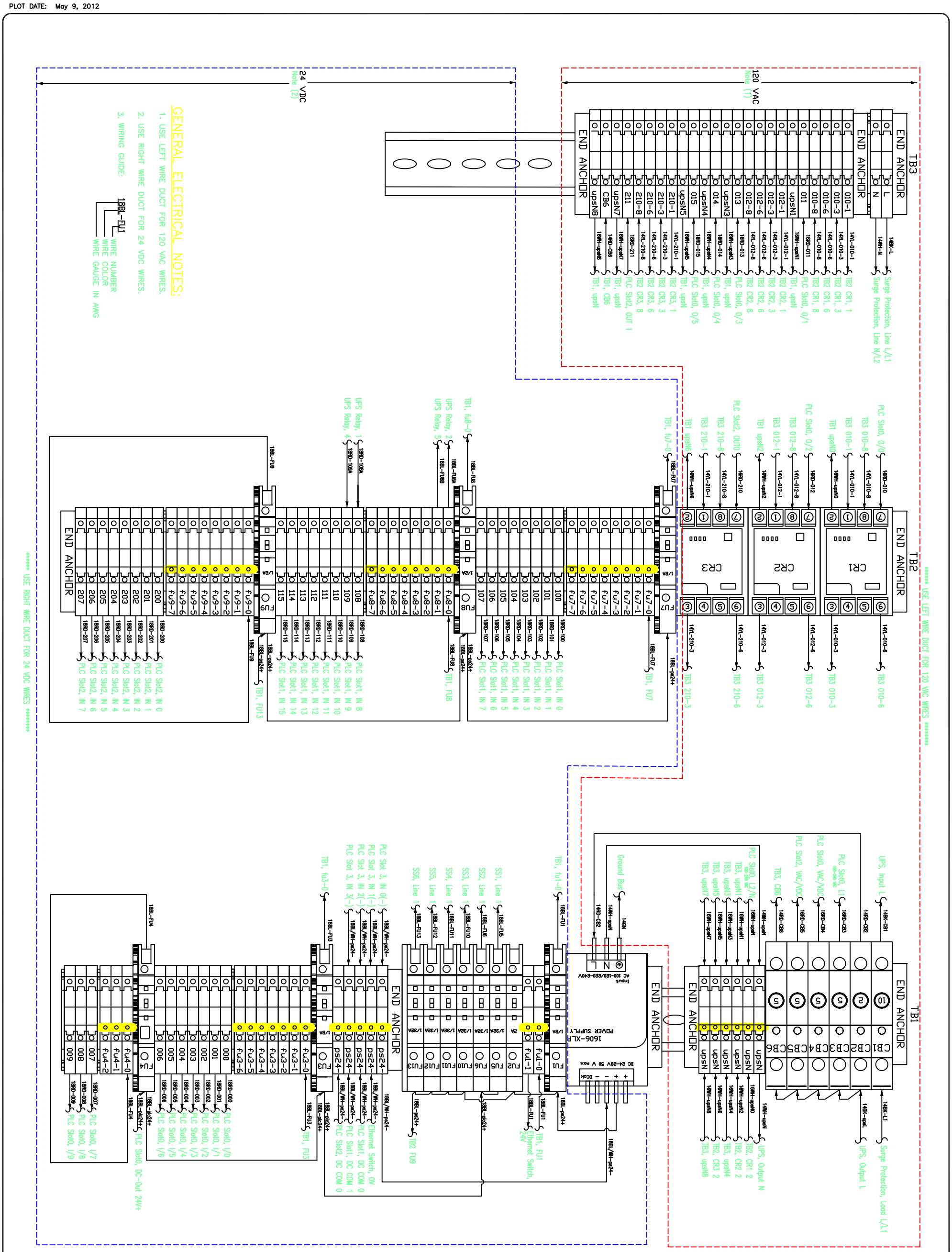


CONSTRUCTION OR BID

| | | | |
|---|---|---|---|
| SHEET NO. 5 OF 5 | PROJECT #<br>SANITARY SEWER PUMP STATION<br>CONTROL PANEL<br>TERMINAL BLOCK TB1, TB2 & TB3 WIRING | REVISIONS<br>NO. / DATE / BY / CHK'D / DESCRIPTION | CITY OF FORT LAUDERDALE<br>PUBLIC WORKS DEPARTMENT<br>DISTRIBUTION & COLLECTION<br>4250 NW 10 Ave, Fort Lauderdale, Florida 33309 |

| | |
|---|---|
| DRAWN BY: DYA | DATE: JAN 2012 |
| DESIGNED BY: DYA | SCALE: NTS |
| CHECKED BY: | |
| FIELD BOOK: | |

TOTAL: 5
CAD FILE: SUITCASE_DIAG_5
DRAWING FILE NO.

**CITY OF FORT LAUDERDALE**
**GENERAL CONDITIONS**

These instructions are standard for all contracts for commodities or services issued through the City of Fort Lauderdale Procurement Services Division. The City may delete, supersede, or modify any of these standard instructions for a particular contract by indicating such change in the Invitation to Bid (ITB) Special Conditions, Technical Specifications, Instructions, Proposal Pages, Addenda, and Legal Advertisement. In this general conditions document, Invitation to Bid (ITB) and Request for Proposal (RFP) are interchangeable.

**PART I BIDDER PROPOSAL PAGE(S) CONDITIONS:**

**1.01 BIDDER ADDRESS**: The City maintains automated vendor address lists that have been generated for each specific Commodity Class item through our bid issuing service, BidSync. Notices of Invitations to Bid (ITB'S) are sent by e-mail to the selection of bidders who have fully registered with BidSync or faxed (if applicable) to every vendor on those lists, who may then view the bid documents online. Bidders who have been informed of a bid's availability in any other manner are responsible for registering with BidSync in order to view the bid documents. There is no fee for doing so. If you wish bid notifications be provided to another e-mail address or fax, please contact BidSync. If you wish purchase orders sent to a different address, please so indicate in your bid response. If you wish payments sent to a different address, please so indicate on your invoice.

**1.02 DELIVERY:** Time will be of the essence for any orders placed as a result of this ITB. The City reserves the right to cancel any orders, or part thereof, without obligation if delivery is not made in accordance with the schedule specified by the Bidder and accepted by the City.

**1.03 PACKING SLIPS:** It will be the responsibility **of** the awarded Contractor, to attach all packing slips to the OUTSIDE of each shipment. Packing slips must provide a detailed description of what is to be received and reference the City of Fort Lauderdale purchase order number that is associated with the shipment. Failure to provide a detailed packing slip attached to the outside of shipment may result in refusal of shipment at Contractor's expense.

**1.04 PAYMENT TERMS AND CASH DISCOUNTS:** Payment terms, unless otherwise stated in this ITB, will be considered to be net 45 days after the date of satisfactory delivery at the place of acceptance and receipt of correct invoice at the office specified, whichever occurs last. Bidder may offer cash discounts for prompt payment but they will not be considered in determination of award. If a Bidder offers a discount, it is understood that the discount time will be computed from the date of satisfactory delivery, at the place of acceptance, and receipt of correct invoice, at the office specified, whichever occurs last**.**

**1.05 TOTAL BID DISCOUNT:** If Bidder offers a discount for award of all items listed in the bid, such discount shall be deducted from the total of the firm net unit prices bid and shall be considered in tabulation and award of bid**.**

**1.06 BIDS FIRM FOR ACCEPTANCE:** Bidder warrants, by virtue of bidding, that the bid and the prices quoted in the bid will be firm for acceptance by the City for a period of ninety (90) days from the date of bid opening unless otherwise stated in the ITB**.**

**1.07 VARIANCES:** For purposes of bid evaluation, Bidder's must indicate any variances, no matter how slight, from ITB General Conditions, Special Conditions, Specifications or Addenda in the space provided in the ITB. No variations or exceptions by a Bidder will be considered or deemed a part of the bid submitted unless such variances or exceptions are listed in the bid and referenced in the space provided on the bidder proposal pages. If variances are not stated, or referenced as required, it will be assumed that the product or service fully complies with the City's terms, conditions, and specifications**.**

By receiving a bid, City does not necessarily accept any variances contained in the bid. All variances submitted are subject to review and approval by the City. If any bid contains material variances that, in the City's sole opinion, make that bid conditional in nature, the City reserves the right to reject the bid or part of the bid that is declared, by the City as conditional.

**1.08 NO BIDS:** If you do not intend to bid please indicate the reason, such as insufficient time to respond, do not offer product or service, unable to meet specifications, schedule would not permit, or any other reason, in the space provided in this ITB. Failure to bid or return no bid comments prior to the bid due and opening date and time, indicated in this ITB, may result in your firm being deleted from our Bidder's registration list for the Commodity Class Item requested in this ITB.

**1.09 MINORITY AND WOMEN BUSINESS ENTERPRISE PARTICIPATION AND BUSINESS DEFINITIONS:** The City of Fort Lauderdale wants to increase the participation of Minority Business Enterprises (MBE), Women Business Enterprises (WBE), and Small Business Enterprises (SBE) in its procurement activities. If your firm qualifies in accordance with the below definitions please indicate in the space provided in this ITB.

Minority Business Enterprise (MBE) "A Minority Business" is a business enterprise that is owned or controlled by one or more socially or economically disadvantaged persons. Such disadvantage may arise from cultural, racial, chronic economic circumstances or background or other similar cause. Such persons include, but are not limited to: Blacks, Hispanics, Asian Americans, and Native Americans.

The term "Minority Business Enterprise" means a business at least 51 percent of which is owned by minority group members or, in the case of a publicly owned business, at least 51 percent of the stock of which is owned by minority group members. For the purpose of the preceding sentence, minority group members are citizens of the United States who include, but are not limited to: Blacks, Hispanics, Asian Americans, and Native Americans.

Women Business Enterprise (WBE) a "Women Owned or Controlled Business" is a business enterprise at least 51 percent of which is owned by females or, in the case of a publicly owned business, at least 51 percent of the stock of which is owned by females.

Small Business Enterprise (SBE) "Small Business" means a corporation, partnership, sole proprietorship, or other legal entity

formed for the purpose of making a profit, which is independently owned and operated, has either fewer than 100 employees or less than $1,000,000 in annual gross receipts.

BLACK, which includes persons having origins in any of the Black racial groups of Africa.
WHITE, which includes persons whose origins are Anglo-Saxon and Europeans and persons of Indo-European decent including Pakistani and East Indian.
HISPANIC, which includes persons of Mexican, Puerto Rican, Cuban, Central and South American, or other Spanish culture or origin, regardless of race.
NATIVE AMERICAN, which includes persons whose origins are American Indians, Eskimos, Aleuts, or Native Hawaiians.
ASIAN AMERICAN, which includes persons having origin in any of the original peoples of the Far East, Southeast Asia, the Indian subcontinent, or the Pacific Islands.

**1.10 MINORITY-WOMEN BUSINESS ENTERPRISE PARTICIPATION**

It is the desire of the City of Fort Lauderdale to increase the participation of minority (MBE) and women-owned (WBE) businesses in its contracting and procurement programs. While the City does not have any preference or set aside programs in place, it is committed to a policy of equitable participation for these firms. Proposers are requested to include in their proposals a narrative describing their past accomplishments and intended actions in this area. If proposers are considering minority or women owned enterprise participation in their proposal, those firms, and their specific duties have to be identified in the proposal. If a proposer is considered for award, he or she will be asked to meet with City staff so that the intended MBE/WBE participation can be formalized and included in the subsequent contract.

**1.11 SCRUTINIZED COMPANIES**

This Section applies to any contract for goods or services of $1 million or more:

The Contractor certifies that it is not on the Scrutinized Companies with Activities in Sudan List or the Scrutinized Companies with Activities in the Iran Petroleum Energy Sector List as provided in section 287.135, Florida Statutes (2011), as may be amended or revised. The City may terminate this Contract at the City's option if the Contractor is found to have submitted a false certification as provided under subsection (5) of section 287.135, Florida Statutes (2011), as may be amended or revised, or been placed on the Scrutinized Companies with Activities in Sudan List or the Scrutinized Companies with Activities in the Iran Petroleum Energy Sector List.

**1.12 DEBARRED OR SUSPENDED BIDDERS OR PROPOSERS**

The bidder or proposer certifies, by submission of a response to this solicitation, that neither it nor its principals are presently debarred or suspended by any Federal department or agency.

**Part II DEFINITIONS/ORDER OF PRECEDENCE:**

**2.01 BIDDING DEFINITIONS** The City will use the following definitions in it's general conditions, special conditions, technical specifications, instructions to bidders, addenda and any other document used in the bidding process:
INVITATION TO BID (ITB) when the City is requesting bids from qualified Bidders.
REQUEST FOR PROPOSALS (RFP) when the City is requesting proposals from qualified Proposers.
BID – a price and terms quote received in response to an ITB.
PROPOSAL – a proposal received in response to an RFP.
BIDDER – Person or firm submitting a Bid.
PROPOSER – Person or firm submitting a Proposal.
RESPONSIVE BIDDER – A person whose bid conforms in all material respects to the terms and conditions included in the ITB.
RESPONSIBLE BIDDER – A person who has the capability in all respects to perform in full the contract requirements, as stated in the ITB, and the integrity and reliability that will assure good faith performance.
FIRST RANKED PROPOSER – That Proposer, responding to a City RFP, whose Proposal is deemed by the City, the most advantageous to the City after applying the evaluation criteria contained in the RFP.
SELLER – Successful Bidder or Proposer who is awarded a Purchase Order or Contract to provide goods or services to the City.
CONTRACTOR – Successful Bidder or Proposer who is awarded a Purchase Order, award Contract, Blanket Purchase Order agreement, or Term Contract to provide goods or services to the City.
CONTRACT – A deliberate verbal or written agreement between two or more competent parties to perform or not to perform a certain act or acts, including all types of agreements, regardless of what they may be called, for the procurement or disposal of equipment, materials, supplies, services or construction.
CONSULTANT – Successful Bidder or Proposer who is awarded a contract to provide professional services to the City.
The following terms may be used interchangeably by the City: ITB and/or RFP; Bid or Proposal; Bidder, Proposer, or Seller; Contractor or Consultant; Contract, Award, Agreement or Purchase Order**.**

**2.02 SPECIAL CONDITIONS:** Any and all Special Conditions contained in this ITB that may be in variance or conflict with these General Conditions shall have precedence over these General Conditions. If no changes or deletions to General Conditions are made in the Special Conditions, then the General Conditions shall prevail in their entirety,

**PART III BIDDING AND AWARD PROCEDURES:**

**3.01 SUBMISSION AND RECEIPT OF BIDS:** To receive consideration, bids must be received prior to the bid opening date and time. Unless otherwise specified, Bidder's should use the proposal forms provided by the City. These forms may be duplicated, but failure to use the forms may cause the bid to be rejected. Any erasures or corrections on the bid must be made in ink and initialed by Bidder in ink. All information submitted by the Bidder shall be printed, typewritten or filled in with pen and ink. Bids shall be signed in ink. Separate bids must be submitted for each ITB issued by the City in separate sealed envelopes properly marked. When a particular ITB or RFP requires multiple copies of bids or proposals they may be included in a single envelope or package properly sealed and identified. Only send bids via facsimile transmission (FAX) if the ITB specifically states that bids sent via FAX will be considered. If such a statement is not included in the ITB, bids sent via FAX will be rejected. Bids will be publicly opened in the Procurement Office, or other designated area, in the presence of Bidders, the public, and City staff. Bidders and the public are invited and encouraged to attend bid openings. Bids will be tabulated and made available for review by Bidder's and the public in accordance with applicable regulations.

**3.02 MODEL NUMBER CORRECTIONS:** If the model number for the make specified in this ITB is incorrect, or no longer available and replaced with an updated model with new specifications, the Bidder shall enter the correct model number on the bidder proposal page. In the case of an updated model with new specifications, Bidder shall provide adequate information to allow the City to determine if the model bid meets the City's requirements.

**3.03 PRICES QUOTED:** Deduct trade discounts, and quote firm net prices. Give both unit price and extended total. In the case of a discrepancy in computing the amount of the bid, the unit price quoted will govern. All prices quoted shall be F.O.B. destination, freight prepaid (Bidder pays and bears freight charges, Bidder owns goods in transit and files any claims), unless otherwise stated in Special Conditions. Each item must be bid separately. No attempt shall be made to tie any item or items contained in the ITB with any other business with the City.

**3.04 TAXES:** The City of Fort Lauderdale is exempt from Federal Excise and Florida Sales taxes on direct purchase of tangible property. Exemption **number for EIN is 59-6000319, and State Sales tax exemption number is 85-8013875578C-1.**

**3.05 WARRANTIES OF USAGE:** Any quantities listed in this ITB as estimated or projected are provided for tabulation and information purposes only. No warranty or guarantee of quantities is given or implied. It is understood that the Contractor will furnish the City's needs as they arise.

**3.06 APPROVED EQUAL:** When the technical specifications call for a brand name, manufacturer, make, model, or vendor catalog number with acceptance of APPROVED EQUAL, it shall be for the purpose of establishing a level of quality and features desired and acceptable to the City. In such cases, the City will be receptive to any unit that would be considered by qualified City personnel as an approved equal. In that the specified make and model represent a level of quality and features desired by the City, the Bidder must state clearly in the bid any variance from those specifications. It is the Bidder's responsibility to provide adequate information, in the bid, to enable the City to ensure that the bid meets the required criteria. If adequate information is not submitted with the bid, it may be rejected. The City will be the sole judge in determining if the item bid qualifies as an approved equal.

**3.07 MINIMUM AND MANDATORY TECHNICAL SPECIFICATIONS:** The technical specifications may include items that are considered minimum, mandatory, or required. If any Bidder is unable to meet or exceed these items, and feels that the technical specifications are overly restrictive, the bidder must notify the Procurement Services Division immediately. Such notification must be received by the Procurement Services Division prior to the deadline contained in the ITB, for questions of a material nature, or prior to five (5) days before bid due and open date, whichever occurs first. If no such notification is received prior to that deadline, the City will consider the technical specifications to be acceptable to all bidders.

**3.08 MISTAKES:** Bidders are cautioned to examine all terms, conditions, specifications, drawings, exhibits, addenda, delivery instructions and special conditions pertaining to the ITB. Failure of the Bidder to examine all pertinent documents shall not entitle the bidder to any relief from the conditions imposed in the contract.

**3.09 SAMPLES AND DEMONSTRATIONS:** Samples or inspection of product may be requested to determine suitability. Unless otherwise specified in Special Conditions, samples shall be requested after the date of bid opening, and if requested should be received by the City within seven (7) working days of request. Samples, when requested, must be furnished free of expense to the City and if not used in testing or destroyed, will upon request of the Bidder, be returned within thirty (30) days of bid award at Bidder's expense. When required, the City may request full demonstrations of units prior to award. When such demonstrations are requested, the Bidder shall respond promptly and arrange a demonstration at a convenient location. Failure to provide samples or demonstrations as specified by the City may result in rejection of a bid.

**3.10 LIFE CYCLE COSTING**: If so specified in the ITB, the City may elect to evaluate equipment proposed on the basis of total cost of ownership. In using Life Cycle Costing, factors such as the following may be considered: estimated useful life, maintenance costs, cost of supplies, labor intensity, energy usage, environmental impact, and residual value. The City reserves the right to use those or other applicable criteria, in its sole opinion that will most accurately estimate total cost of use and ownership.

**3.11 BIDDING ITEMS WITH RECYCLED CONTENT:** In addressing environmental concerns, the City of Fort Lauderdale encourages Bidders to submit bids or alternate bids containing items with recycled content. When submitting bids containing items with recycled content, Bidder shall provide documentation adequate for the City to verify the recycled content. The City prefers packaging consisting of materials that are degradable or able to be recycled. When specifically stated in the ITB, the City may give preference to bids containing items manufactured with recycled material or packaging that is able to be recycled.

**3.12 USE OF OTHER GOVERNMENTAL CONTRACTS:** The City reserves the right to reject any part or all of any bids received and utilize other available governmental contracts, if such action is in its best interest**.**

**3.13 QUALIFICATIONS/INSPECTION:** Bids will only be considered from firms normally engaged in providing the types of commodities/services specified herein. The City reserves the right to inspect the Bidder's facilities, equipment, personnel, and organization at any time, or to take any other action necessary to determine Bidder's ability to perform. The Procurement Director reserves the right to reject bids where evidence or evaluation is determined to indicate inability to perform**.**

**3.14 BID SURETY:** If Special Conditions require a bid security, it shall be submitted in the amount stated. A bid security can be in the form of a bid bond or cashiers check. Bid security will be returned to the unsuccessful bidders as soon as practicable after opening of bids. Bid security will be returned to the successful bidder after acceptance of the performance bond, if required; acceptance of insurance coverage, if required; and full execution of contract documents, if required; or conditions as stated in Special Conditions**.**

3.15 **PUBLIC RECORDS/TRADE SECRETS/COPYRIGHT:** The Proposer's response to the RFP is a public record pursuant to Florida law, which is subject to disclosure by the City under the State of Florida Public Records Law, Florida Statutes Chapter 119.07 ("Public Records Law"). The City shall permit public access to all documents, papers, letters or other material submitted in connection with this RFP and the Contract to be executed for this RFP, subject to the provisions of Chapter 119.07 of the Florida Statutes.

Any language contained in the Proposer's response to the RFP purporting to require confidentiality of any portion of the Proposer's response to the RFP, except to the extent that certain information is in the City's opinion a Trade Secret pursuant to Florida law, shall be void. If a Proposer submits any documents or other information to the City which the Proposer claims is Trade Secret information and exempt from Florida Statutes Chapter 119.07 ("Public Records Laws"), the Proposer shall clearly designate that it is a Trade Secret and that it is asserting that the document or information is exempt. The Proposer must specifically identify the exemption being claimed under Florida Statutes 119.07. The City shall be the final arbiter of whether any information contained in the Proposer's response to the RFP constitutes a Trade Secret. The city's determination of whether an exemption applies shall be final, and the proposer agrees to defend, indemnify, and hold harmless the city and the city's officers, employees, and agent, against any loss or damages incurred by any person or entity as a result of the city's treatment of records as public records. Proposals purporting to be subject to copyright protection in full or in part will be rejected.

EXCEPT FOR CLEARLY MARKED PORTIONS THAT ARE BONA FIDE TRADE SECRETS PURSUANT TO FLORIDA LAW, DO NOT MARK YOUR RESPONSE TO THE RFP AS PROPRIETARY OR CONFIDENTIAL. DO NOT MARK YOUR RESPONSE TO THE RFP OR ANY PART THEREOF AS COPYRIGHTED.

**3.16 PROHIBITION OF INTEREST:** No contract will be awarded to a bidding firm who has City elected officials, officers or employees affiliated with it, unless the bidding firm has fully complied with current Florida State Statutes and City Ordinances relating to this issue. Bidders must disclose any such affiliation. Failure to disclose any such affiliation will result in disqualification of the Bidder and removal of the Bidder from the City's bidder lists and prohibition from engaging in any business with the City**.**

**3.17 RESERVATIONS FOR AWARD AND REJECTION OF BIDS:** The City reserves the right to accept or reject any or all bids, part of bids, and to waive minor irregularities or variations to specifications contained in bids, and minor irregularities in the bidding process. The City also reserves the right to award the contract on a split order basis, lump sum basis, individual item basis, or such combination as shall best serve the interest of the City. The City reserves the right to make an award to the responsive and responsible bidder whose product or service meets the terms, conditions, and specifications of the ITB and whose bid is considered to best serve the City's interest. In determining the responsiveness of the offer and the responsibility of the Bidder, the following shall be considered when applicable: the ability, capacity and skill of the Bidder to perform as required; whether the Bidder can perform promptly, or within the time specified, without delay or interference; the character, integrity, reputation, judgment, experience and efficiency of the Bidder; the quality of past performance by the Bidder; the previous and existing compliance by the Bidder with related laws and ordinances; the sufficiency of the Bidder's financial resources; the availability, quality and adaptability of the Bidder's supplies or services to the required use; the ability of the Bidder to provide future maintenance, service or parts; the number and scope of conditions attached to the bid**.**

If the ITB provides for a contract trial period, the City reserves the right, in the event the selected bidder does not perform satisfactorily, to award a trial period to the next ranked bidder or to award a contract to the next ranked bidder, if that bidder has successfully provided services to the City in the past. This procedure to continue until a bidder is selected or the contract is re-bid, at the sole option of the City.

**3.18 LEGAL REQUIREMENTS:** Applicable provisions of all federal, state, county laws, and local ordinances, rules and regulations, shall govern development, submittal and evaluation of all bids received in response hereto and shall govern any and all claims and disputes which may arise between person(s) submitting a bid response hereto and the City by and through its officers, employees and authorized representatives, or any other person, natural or otherwise; and lack of knowledge by any bidder shall not constitute a cognizable defense against the legal effect thereof**.**

**3.19 BID PROTEST PROCEDURE: ANY PROPOSER OR BIDDER WHO IS NOT RECOMMENDED FOR AWARD OF A CONTRACT AND WHO ALLEGES A FAILURE BY THE CITY TO FOLLOW THE CITY'S PROCUREMENT ORDINANCE OR ANY APPLICABLE LAW MAY PROTEST TO THE DIRECTOR OF PROCUREMENT SERVICES DIVISION (DIRECTOR), BY DELIVERING A LETTER OF PROTEST TO THE DIRECTOR WITHIN FIVE (5) DAYS AFTER A NOTICE OF INTENT TO AWARD IS POSTED ON THE CITY'S WEB SITE AT THE FOLLOWING LINK: http://www.fortlauderdale.gov/purchasing/notices_of_intent.htm**

**THE COMPLETE PROTEST ORDINANCE MAY BE FOUND ON THE CITY'S WEB SITE AT THE FOLLOWING LINK: http://www.fortlauderdale.gov/purchasing/protestordinance.pdf**

## PART IV BONDS AND INSURANCE

**4.01 PERFORMANCE BOND:** If a performance bond is required in Special Conditions, the Contractor shall within fifteen (15) working days after notification of award, furnish to the City a Performance Bond, payable to the City of Fort Lauderdale, Florida, in the face amount specified in Special Conditions as surety for faithful performance under the terms and conditions of the contract. If the bond is on an annual coverage basis, renewal for each succeeding year shall be submitted to the City thirty (30) days prior to the termination date of the existing Performance Bond. The Performance Bond must be executed by a surety company of recognized standing, authorized to do business in the State of Florida and having a resident agent.

Acknowledgement and agreement is given by both parties that the amount herein set for the Performance Bond is not intended to

be nor shall be deemed to be in the nature of liquidated damages nor is it intended to limit the liability of the Contractor to the City in the event of a material breach of this Agreement by the Contractor**.**

**4.02 INSURANCE:** If the Contractor is required to go on to City property to perform work or services as a result of ITB award, the Contractor shall assume full responsibility and expense to obtain all necessary insurance as required by City or specified in Special Conditions**.**

The Contractor shall provide to the Procurement Services Division original certificates of coverage and receive notification of approval of those certificates by the City's Risk Manager prior to engaging in any activities under this contract. The Contractors insurance is subject to the approval of the City's Risk Manager. The certificates must list the City as an ADDITIONAL INSURED for General Liability Insurance, and shall have no less than thirty (30) days written notice of cancellation or material change. Further modification of the insurance requirements may be made at the sole discretion of the City's Risk Manager if circumstances change or adequate protection of the City is not presented. Bidder, by submitting the bid, agrees to abide by such modifications**.**

**PART V PURCHASE ORDER AND CONTRACT TERMS:**

**5.01 COMPLIANCE TO SPECIFICATIONS, LATE DELIVERIES/PENALTIES:** Items offered may be tested for compliance to bid specifications. Items delivered which do not conform to bid specifications may be rejected and returned at Contractor's expense. Any violation resulting in contract termination for cause or delivery of items not conforming to specifications, or late delivery may also result in:

- Bidders name being removed from the City's bidder's mailing list for a specified period and Bidder will not be recommended for any award during that period.
- All City Departments being advised to refrain from doing business with the Bidder.
- All other remedies in law or equity.

**5.02 ACCEPTANCE, CONDITION, AND PACKAGING:** The material delivered in response to ITB award shall remain the property of the Seller until a physical inspection is made and the material accepted to the satisfaction of the City. The material must comply fully with the terms of the ITB, be of the required quality, new, and the latest model. All containers shall be suitable for storage and shipment by common carrier, and all prices shall include standard commercial packaging. The City will not accept substitutes of any kind. Any substitutes or material not meeting specifications will be returned at the Bidder's expense. Payment will be made only after City receipt and acceptance of materials or services.

**5.03 SAFETY STANDARDS:** All manufactured items and fabricated assemblies shall comply with applicable requirements of the Occupation Safety and Health Act of 1970 as amended, and be in compliance with Chapter 442, Florida Statutes. Any toxic substance listed in Section 38F-41.03 of the Florida Administrative Code delivered as a result of this order must be accompanied by a completed Material Safety Data Sheet (MSDS).

**5.04 ASBESTOS STATEMENT:** All material supplied must be 100% asbestos free. Bidder, by virtue of bidding, certifies that if awarded any portion of the ITB the bidder will supply only material or equipment that is 100% asbestos free.

**5.05 OTHER GOVERNMENTAL ENTITIES:** If the Bidder is awarded a contract as a result of this ITB, the bidder may, if the bidder has sufficient capacity or quantities available, provide to other governmental agencies, so requesting, the products or services awarded in accordance with the terms and conditions of the ITB and resulting contract. Prices shall be F.O.B. delivered to the requesting agency.

**5.06 VERBAL INSTRUCTIONS PROCEDURE:** No negotiations, decisions, or actions shall be initiated or executed by the Contractor as a result of any discussions with any City employee. Only those communications which are in writing from an authorized City representative may be considered. Only written communications from Contractors, which are assigned by a person designated as authorized to bind the Contractor, will be recognized by the City as duly authorized expressions on behalf of Contractors.

**5.07 INDEPENDENT CONTRACTOR:** The Contractor is an independent contractor under this Agreement. Personal services provided by the Proposer shall be by employees of the Contractor and subject to supervision by the Contractor, and not as officers, employees, or agents of the City. Personnel policies, tax responsibilities, social security, health insurance, employee benefits, procurement policies unless otherwise stated in this ITB, and other similar administrative procedures applicable to services rendered under this contract shall be those of the Contractor.

**5.08 INDEMNITY/HOLD HARMLESS AGREEMENT:** The Contractor agrees to protect, defend, indemnify, and hold harmless the City of Fort Lauderdale and its officers, employees and agents from and against any and all losses, penalties, damages, settlements, claims, costs, charges for other expenses, or liabilities of every and any kind including attorneys fees, in connection with or arising directly or indirectly out of the work agreed to or performed by Contractor under the terms of any agreement that may arise due to the bidding process. Without limiting the foregoing, any and all such claims, suits, or other actions relating to personal injury, death, damage to property, defects in materials or workmanship, actual or alleged violations of any applicable Statute, ordinance, administrative order, rule or regulation, or decree of any court shall be included in the indemnity hereunder.

**5.09 TERMINATION FOR CAUSE:** If, through any cause, the Contractor shall fail to fulfill in a timely and proper manner its obligations under this Agreement, or if the Contractor shall violate any of the provisions of this Agreement, the City may upon written notice to the Contractor terminate the right of the Contractor to proceed under this Agreement, or with such part or parts of the Agreement as to which there has been default, and may hold the Contractor liable for any damages caused to the City by reason of such default and termination. In the event of such termination, any completed services performed by the Contractor under this Agreement shall, at the option of the City, become the City's property and the Contractor shall be entitled to receive equitable compensation for any work completed to the satisfaction of the City. The Contractor, however, shall not be relieved of liability to the City for damages sustained by the City by reason of any breach of the Agreement by the Contractor, and the City may withhold any payments to the Contractor for the purpose of setoff until such time as the amount of damages due to the City from the Contractor can be determined.

**5.10 TERMINATION FOR CONVENIENCE:** The City reserves the right, in its best interest as determined by the City, to cancel contract

by giving written notice to the Contractor thirty (30) days prior to the effective date of such cancellation.

**5.11 CANCELLATION FOR UNAPPROPRIATED FUNDS:** The obligation of the City for payment to a Contractor is limited to the availability of funds appropriated in a current fiscal period, and continuation of the contract into a subsequent fiscal period is subject to appropriation of funds, unless otherwise authorized by law.

**5.12 RECORDS/AUDIT:** The Contractor shall maintain during the term of the contract all books of account, reports and records in accordance with generally accepted accounting practices and standards for records directly related to this contract. The Contractor agrees to make available to the City's Internal Auditor, during normal business hours and in Broward, Miami-Dade or Palm Beach Counties, all books of account, reports and records relating to this contract should be retained for the duration of the contract and for three years after the final payment under this Agreement, or until all pending audits, investigations or litigation matters relating to the contract are closed, whichever is later.

**5.13 PERMITS, TAXES, LICENSES:** The successful Contractor shall, at their own expense, obtain all necessary permits, pay all licenses, fees and taxes, required to comply with all local ordinances, state and federal laws, rules and regulations applicable to business to be carried out under this contract.

**5.14 LAWS/ORDINANCES:** The Contractor shall observe and comply with all Federal, state, local and municipal laws, ordinances rules and regulations that would apply to this contract.

**5.15 NON-DISCRIMINATION:** There shall be no discrimination as to race, sex, color, creed, age or national origin in the operations conducted under this contract.

**5.16 UNUSUAL CIRCUMSTANCES:** If during a contract term where costs to the City are to remain firm or adjustments are restricted by a percentage or CPI cap, unusual circumstances that could not have been foreseen by either party of the contract occur, and those circumstances significantly affect the Contractor's cost in providing the required prior items or services, then the Contractor may request adjustments to the costs to the City to reflect the changed circumstances. The circumstances must be beyond the control of the Contractor, and the requested adjustments must be fully documented. The City may, after examination, refuse to accept the adjusted costs if they are not properly documented, increases are considered to be excessive, or decreases are considered to be insufficient. In the event the City does not wish to accept the adjusted costs and the matter cannot be resolved to the satisfaction of the City, the City will reserve the following options:

1. The contract can be canceled by the City upon giving thirty (30) days written notice to the Contractor with no penalty to the City or Contractor. The Contractor shall fill all City requirements submitted to the Contractor until the termination date contained in the notice.

2. The City requires the Contractor to continue to provide the items and services at the firm fixed (non-adjusted) cost until the termination of the contract term then in effect.

3. If the City, in its interest and in its sole opinion, determines that the Contractor in a capricious manner attempted to use this section of the contract to relieve themselves of a legitimate obligation under the contract, and no unusual circumstances had occurred, the City reserves the right to take any and all action under law or equity. Such action shall include, but not be limited to, declaring the Contractor in default and disqualifying him for receiving any business from the City for a stated period of time.

If the City does agree to adjusted costs, these adjusted costs shall not be invoiced to the City until the Contractor receives notice in writing signed by a person authorized to bind the City in such matters.

**5.17 ELIGIBILITY:** If applicable, the Contractor must first register with the Department of State of the State of Florida, in accordance with Florida State Statutes, prior to entering into a contract with the City.

**5.18 PATENTS AND ROYALTIES:** The Contractor, without exception, shall indemnify and save harmless the City and its employees from liability of any nature and kind, including cost and expenses for or on account of any copyrighted, patented or un-patented invention, process, or article manufactured or used in the performance of the contract, including its use by the City. If the Contractor uses any design, device, or materials covered by letters, patent or copyright, it is mutually agreed and understood without exception that the bid prices shall include all royalties or costs arising from the use of such design, device, or materials in any way involved in the work.

**5.19 ASSIGNMENT:** Contractor shall not transfer or assign the performance required by this ITB without the prior written consent of the City. Any award issued pursuant to this ITB, and the monies, which may become due hereunder, are not assignable except with the prior written approval of the City Commission or the City Manager or City Manager's designee, depending on original award approval.

**5.20 LITIGATION VENUE:** The parties waive the privilege of venue and agree that all litigation between them in the state courts shall take place in Broward County, Florida and that all litigation between them in the federal courts shall take place in the Southern District in and for the State of Florida.

**NON-COLLUSION STATEMENT:**

By signing this offer, the vendor/contractor certifies that this offer is made independently and free from collusion. Vendor shall disclose below any City of Fort Lauderdale, FL officer or employee, or any relative of any such officer or employee who is an officer or director of, or has a material interest in, the vendor's business, who is in a position to influence this procurement.

Any City of Fort Lauderdale, FL officer or employee who has any input into the writing of specifications or requirements, solicitation of offers, decision to award, evaluation of offers, or any other activity pertinent to this procurement is presumed, for purposes hereof, to be in a position to influence this procurement.

For purposes hereof, a person has a material interest if they directly or indirectly own more than 5 percent of the total assets or capital stock of any business entity, or if they otherwise stand to personally gain if the contract is awarded to this vendor.

In accordance with City of Fort Lauderdale, FL Policy and Standards Manual, 6.10.8.3,

3.3. City employees may not contract with the City through any corporation or business entity in which they or their immediate family members hold a controlling financial interest (e.g. ownership of five (5) percent or more).

3.4. Immediate family members (spouse, parents and children) are also prohibited from contracting with the City subject to the same general rules.

**Failure of a vendor to disclose any relationship described herein shall be reason for debarment in accordance with the provisions of the City Procurement Code.**

| NAME | RELATIONSHIPS |
|---|---|
| | |
| | |
| | |
| | |

**In the event the vendor does not indicate any names, the City shall interpret this to mean that the vendor has indicated that no such relationships exist.**

## BID/PROPOSAL SIGNATURE PAGE

**How to submit bids/proposals:** It is preferred that bids/proposals be submitted electronically at www.bidsync.com, unless otherwise stated in the bid packet. If mailing a hard copy, it will be the sole responsibility of the Bidder to ensure that the bid reaches the City of Fort Lauderdale, City Hall, Procurement Services Division, Suite 619, 100 N. Andrews Avenue, Fort Lauderdale, FL 33301, prior to the bid opening date and time listed. Bids/proposals submitted by fax or email will NOT be accepted.

The below signed hereby agrees to furnish the following article(s) or services at the price(s) and terms stated subject to all instructions, conditions, specifications addenda, legal advertisement, and conditions contained in the bid. I have read all attachments including the specifications and fully understand what is required. By submitting this signed proposal I will accept a contract if approved by the CITY and such acceptance covers all terms, conditions, and specifications of this bid/proposal.

**Please Note:** If responding to this solicitation through BidSync, the electronic version of the bid response will prevail, unless a paper version is clearly marked **by the bidder** in some manner to indicate that it will supplant the electronic version. All fields below **must** be completed. If the field does not apply to you, please note N/A in that field.

Submitted by: _____ _____
(Authorized signature) (date)

Name (printed) _____ Title: _____

Company: (Legal Registration) _____

**CONTRACTOR, IF FOREIGN CORPORATION, MAY BE REQUIRED TO OBTAIN A CERTIFICATE OF AUTHORITY FROM THE DEPARTMENT OF STATE, IN ACCORDANCE WITH FLORIDA STATUTE §607.1501 (visit http://www.dos.state.fl.us/ ).**

Address: _____

City: _____ State: _____ Zip: _____

Telephone No. _____ FAX No. _____ Email: _____

Delivery: Calendar days after receipt of Purchase Order (section 1.02 of General Conditions): _____

Payment Terms (section 1.04): _____ Total Bid Discount (section 1.05): _____

Does your firm qualify for MBE or WBE status (section 1.09): MBE ☐ WBE ☐

ADDENDUM ACKNOWLEDGEMENT - Proposer acknowledges that the following addenda have been received and are included in the proposal:

| Addendum No. | Date Issued |
|---|---|
| | |

P-CARDS: Will your firm accept the City's Credit Card as payment for goods/services?

YES ☐ NO ☐

VARIANCES: State any variations to specifications, terms and conditions in the space provided below or

reference in the space provided below all variances contained on other pages of bid, attachments or bid pages. No variations or exceptions by the Proposer will be deemed to be part of the bid submitted unless such variation or exception is listed and contained within the bid documents and referenced in the space provided below. If no statement is contained in the below space, it is hereby implied that your bid/proposal complies with the full scope of this solicitation. HAVE YOU STATED ANY VARIANCES OR EXCEPTIONS BELOW? BIDDER MUST CLICK THE EXCEPTION LINK IF ANY VARIATION OR EXCEPTION IS TAKEN TO THE SPECIFICATIONS, TERMS AND CONDITIONS. If this section does not apply to your bid, simply mark N/A in the section below.

Variances:

revised 11-29-11

# Question and Answers for Bid #422-11000 - Electronic Control Panel and Pre-Qualifications

**OVERALL BID QUESTIONS**

**There are no questions associated with this bid.**