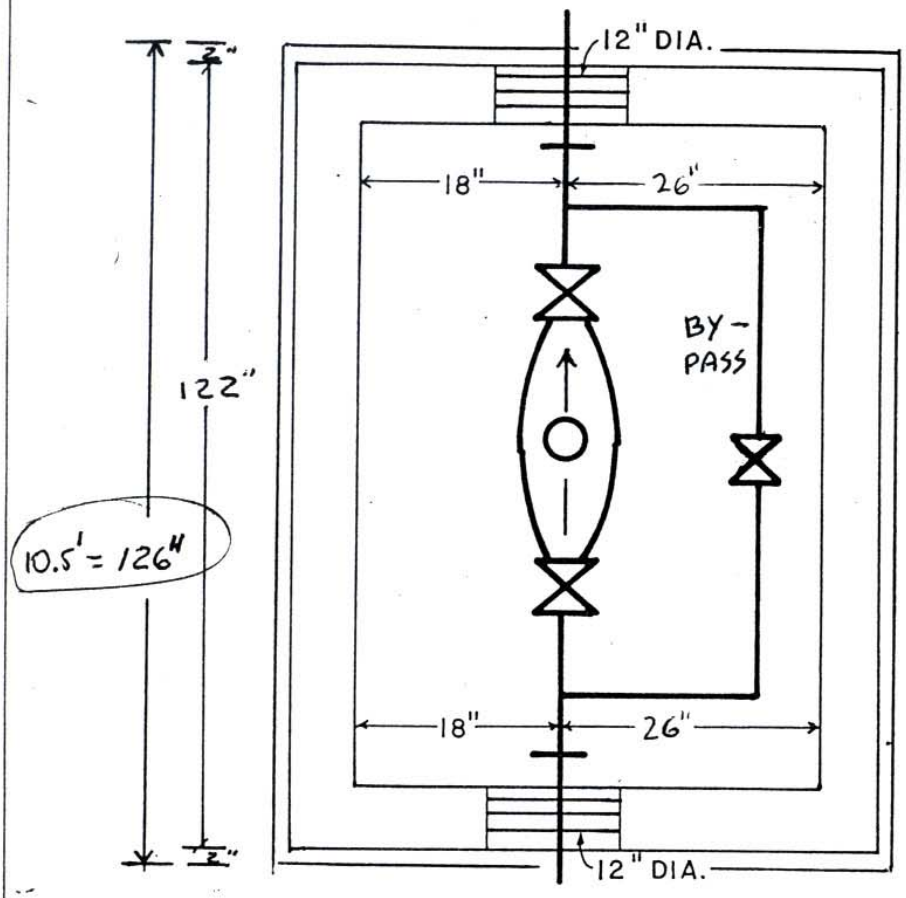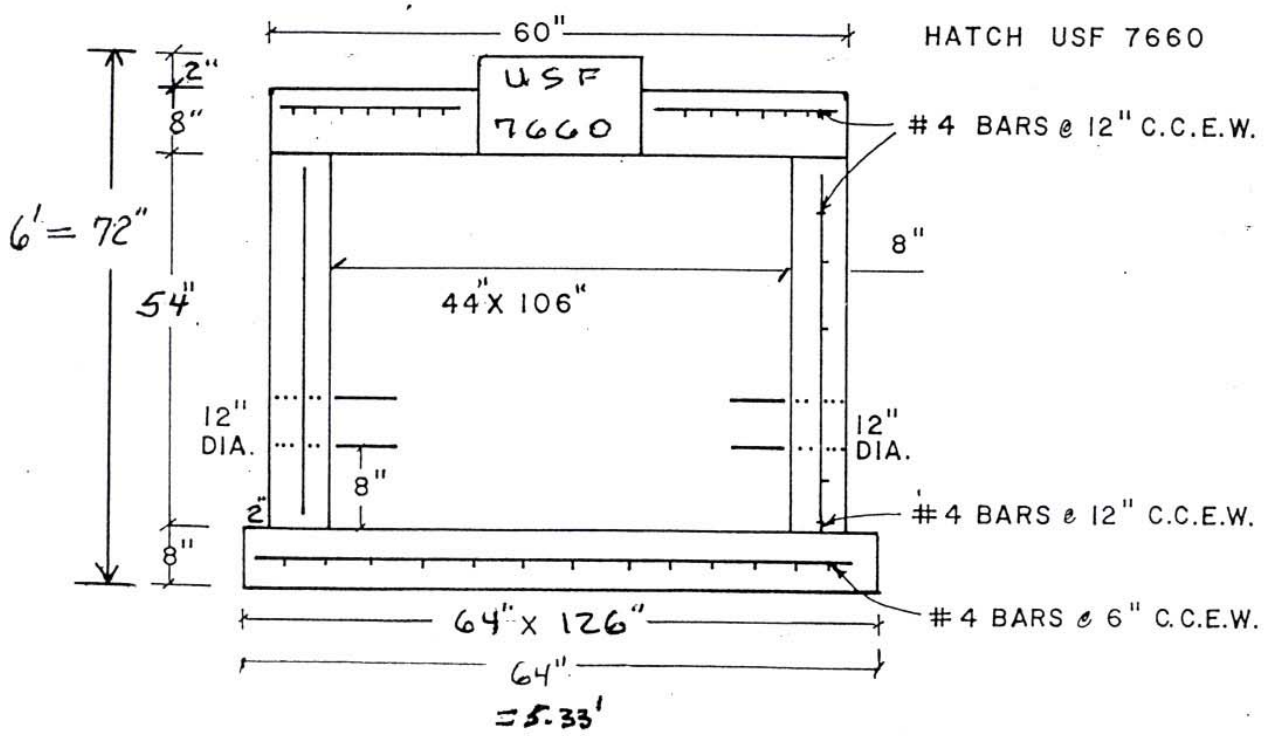4" & 6" COMPOUND
METER DETAIL
REC'D 7-5-94