6" or 8" combination Fire & Domestic meter

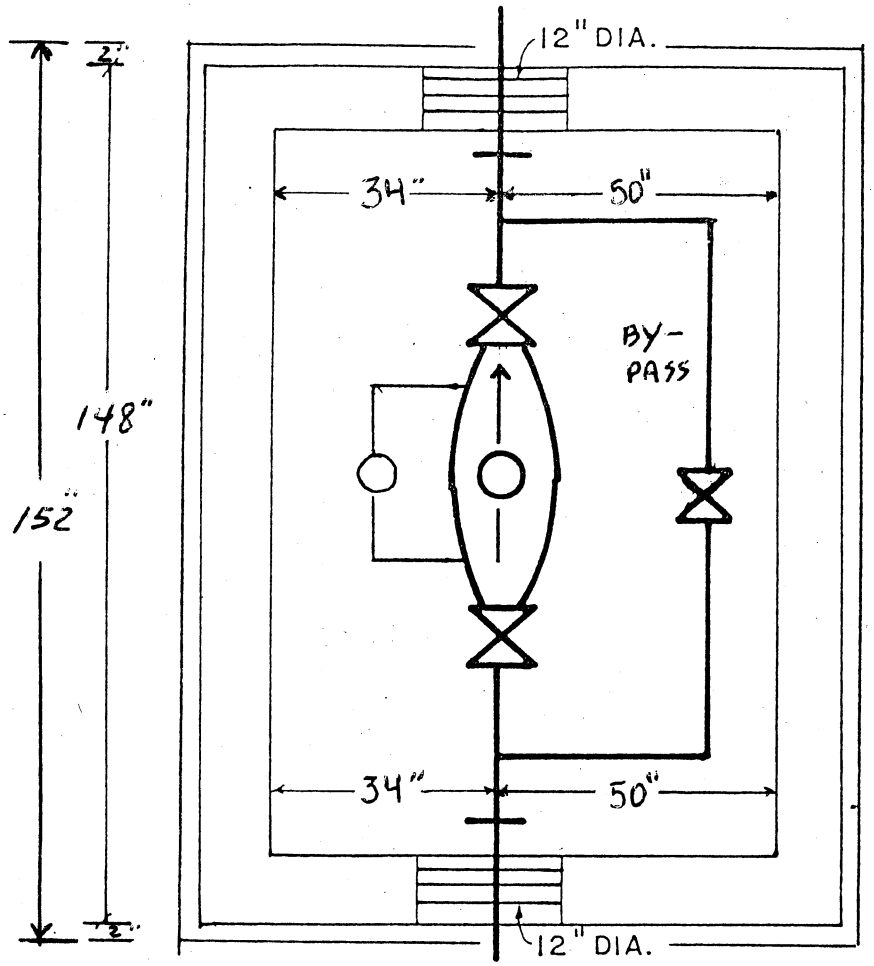
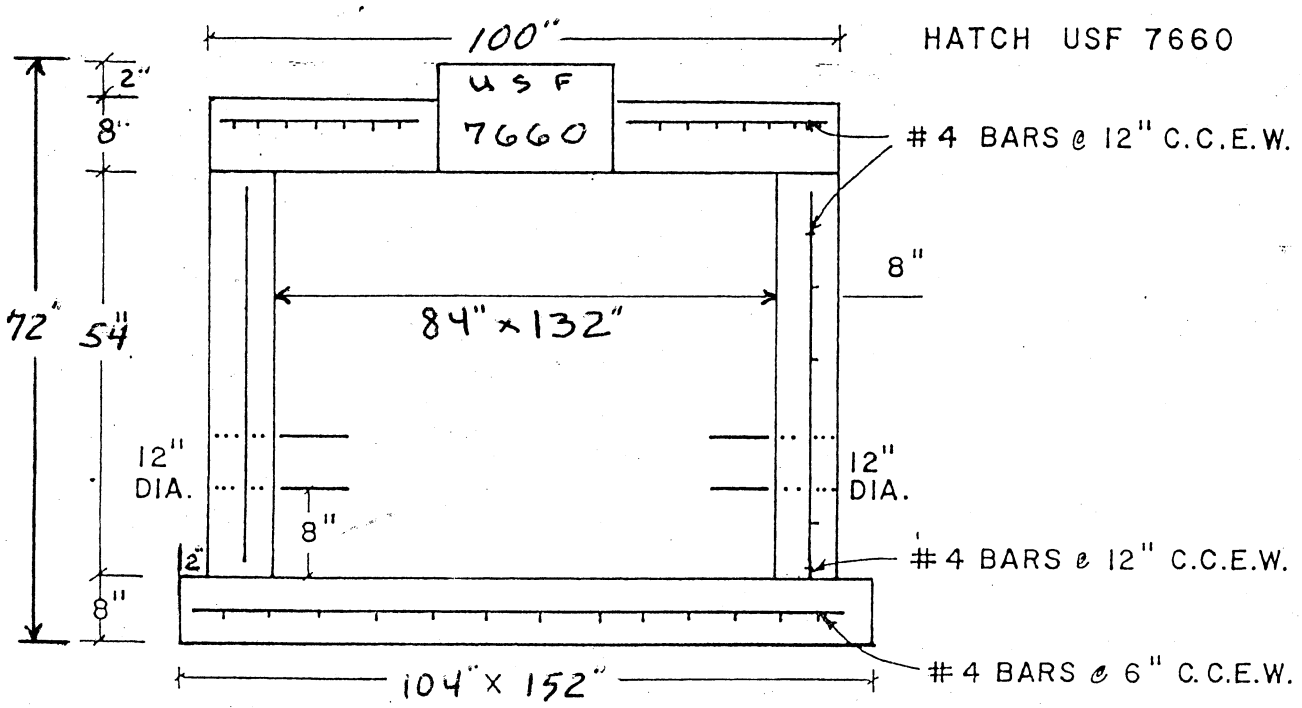
HATCH USF 7660